AGS100

IoT Gateway Fanless System

Ultra-Compact Fanless System with Intel® Atom™ x7/x5, Pentium® & Celeron® Processors

NEW | Wide Temperature | Wide-range power input | iSMART | Fanless | 15 years Life Time

Features

- Supports Intel® Atom™ x7-E3950/x5-E3930 & Pentium® N4200 / Celeron® N3350 Series processors
- Over/Under/Reverse voltage protection
- Wide-range operating temperature from -40°C to 70°C
- 9V~36V DC wide-range power input
- Rugged and fanless design
- Supports DIN-rail mount & wall mount

Specifications

System Mainboard	IB801
CPU Type	Intel® Atom™ x7-E3950/x5-E3930 & Pentium® N4200/ Celeron® N3350 Series processors
System Speed	Up to 2.5GHz
Memory	1x 4GB DDR3L-1866 SO-DIMM, Max. 8GB
Construction	Aluminum & steel
Chassis Color	Sliver (aluminum)
Rear Panel External I/O	1x DVI-I + 1x DisplayPort 4x USB 3.0 ports 2x RJ45 Gigabit Ethernet port 3x LED indicators (HDD, WLAN, WWAN) 1x power button with green LED 1x 3-pin DC-in terminal block type for 9-36V 1x Antenna hole for WLAN module
Left Panel External I/O	2x RS232/422/485 port for COM#1/COM#2 1x Antenna hole for WLAN module 1x Speaker-out connector
Right Panel External I/O	1x SIM card slot
Expansion slots	1x Full-size Mini PCI-E socket (USB 2.0 + PCI-E + SATA) 1x 2230 M.2 E-Key socket for WLAN & BT (USB 2.0 + PCI-E) 1x 3042 M.2 B-Key socket for WWAN & SSD (USB 2.0 + SATA)
Storage	1x mSATA socket (Mini-PCI-E) 1x 2242 M.2 B-Key socket for SSD
Mounting	DIN-rail mounting (DIN-rail mount kit included) Desktop or wall mounting (wall mount kit included)
Dimensions	160mm (W) x 110mm (D) x 44mm (H) 6.3" (W) x 4.33" (D) x 1.73" (H)
Weight	1kg
Operating Temperature	-40°C to 70°C (-40°F~158°F) (12W Max. CPU) -20°C to 60°C (-4°F~140°F) (6W CPU)
Storage Temperature	-40°C ~ 85°C (-40°F~185°F)
Relative Humidity	5~90% @ 45°C, (non-condensing)
Vibration	Operatiing: 2.0 grms / 5~500Hz / random operation (with IEC 60068-2-64) Non-Operating: 3.0 grms / 5~500Hz / random operation (with IEC 60068-2-64)
Shock	Operating : 30G/11 ms Duration (with MIL-STD-810G) Non-operating : 40G/11 ms Duration (with MIL-STD-810G)
Certification	CE / LVD / FCC Class B / CCC

Ordering Information

AGS100-I50	Fanless DIN-rail system w/ Intel® Atom™ processor x7-E3950, 2x COM, 1x 4GB DDR3L memory industrial-grade, 1x 64GB MLC industrial-grade mSATA SSD, w/o power adaptor
AGS100-I30	Fanless DIN-rail system w/ Intel® Atom™ processor x5-E3930, 2x COM, 1x 4GB DDR3L memory industrial-grade, 1x 64GB MLC industrial-grade mSATA SSD, w/o power adaptor
AGS100-420 (MOQ)	Fanless DIN-rail system w/ Intel® Pentium® processor N4200, 2x COM, 1x 4GB DDR3L memory industrial-grade, 1x 64GB MLC industrial-grade mSATA SSD, w/o power adaptor
AGS100-335	Fanless DIN-rail system w/ Intel® Celeron® processor N3350, 2x COM, 1x 4GB DDR3L memory industrial-grade, 1x 64GB MLC (industrial-grade) mSATA SSD, w/o power adaptor
60W power adaptor (Optional)	60W (12V@5A) power adaptor (bare wire type)

Remarks: 1. Specifications are subject to change without prior notice. 2. ODM/OEM is available. 3. For user's manual & datasheet download, visit www.ibase.com.tw.

Intel® Entry Processor Ultra Low Power Reference Table

Processor Number	Intel® Pentium® Processors - 14 nm Apollo-Lake SoC Platform	Intel® Celeron® Processors - 14 nm Apollo-Lake SoC Platform	Intel® Atom™ Processors - 14nm Apollo-Lake-I SoC Platform		
	N4200	N3350	x7-E3950	x5-E3940	x5-E3930
Base Freq (GHz)	1.1	1.1	1.6	1.6	1.3
Intel® Turbo Boost Technology 2.0 (GHz)	2.5	2.4	2.0	1.8	1.8
Last Level Cache	2M	2M	2M	2M	2M
Cores/Threads	4/4	2/2	4/4	4/4	2/2
Memory Speed (DDR3L)	1866	1600	1866	1866	1866
TDP	6W	6W	12W	9.5W	6.5W

DIN-rail Mounting
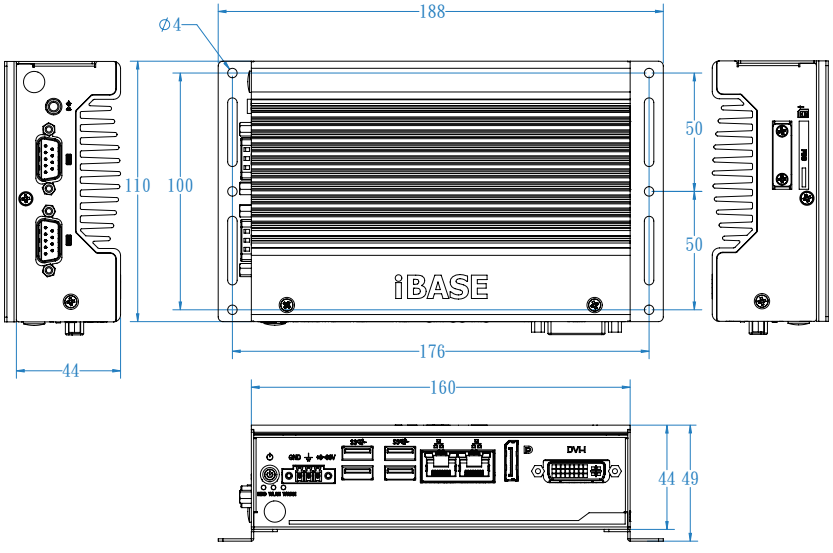
Dimensions and Drawing