IBR117

Single Board Computer

Low-Power 3.5" SBC with NXP ARM® Cortex-A9 i.MX 6Dual 1GHz Processor

Wide Temperature

Fanless

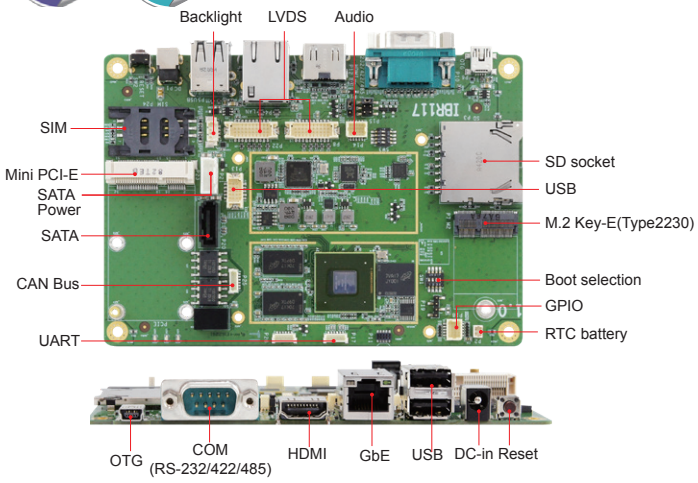

Features

- With NXP Cortex™-A9, i.MX 6Dual 1GHz processor
- Supports HDMI and Dual LVDS interface
- 1GB DDR3, 4GB eMMC and SD socket for expansion
- Supports embedded I/O, COM, GPIO, USB, USB-OTG, audio and Ethernet
- Supports M.2 Key-E (2230) and Mini PCI-E w/ SIM socket for wireless connectivity
- OpenGL ES 2.0 for 3D BitBlt for 2D and OpenVG 1.1

System

Form Factor	3.5-inch Disk-Size SBC
CPU	NXP Cortex™-A9 i.MX 6Dual 1GHz processor
System Memory	1GB DDR3 on board
Data Memory	4GB eMMC on board
Display	2x 18/24-bits single LVDS /1x Dual LVDS, up to 1366 x 768 for 1ch, 1920 x 1080 for 2ch 1x HDMI V1.4, up to 1080P30 at 60Hz
Video Codec	Encoder: MPEG-4 SP, H.264 BP, H.263, MJPEG BP Decoder: MPEG-4 ASP, H.264 HP, MPEG-2 MP, MJPEG BP
LAN	10/100/1000 Mbps
Touch	USB
Audio	2x 5-pin header (1.0mm,1x line-in, 1x line-out)
RTC	IDT 1337AGDVGI8
Watchdog	256 Levels, 0~128 secs
Edge I/O	1x GbE (RJ45 connector) 2x USB Type-A, 1x USB OTG Mini-USB 1x HDMI 1x RS232/422/485 (D-SUB 9 male connector) 1x SD socket (UHS-I SDR-104, 104MB/s max.) 1x Reset button
Header, Expansion & LEDs	2x LVDS connector (Hirose DF13-20) 1x Backlight, 3.3V/1A, 5V/1A, 12/1A (jumper selection) 1x 4-pin wafer (for debug console port) 1x Audio pin header (Line-in and Line-out) 2x 2-wire UART (6-Pin header, 1.0mm) 2x USB 2.0 (2*5 pin header, 1.0mm) 1x M.2 Key-E (2230) w/ USB, SDIO, UART, PCI-E 1x Mini PCI-E (USB only) w/ SIM socket 3x Green LEDs (for Power On/Off, Wireless status, and Programmable) 2x CAN Bus (2*3 pin header) 8x GPIO (2*5 pin header 1.0mm) 1x SATA & 4 pin wafer for the power, 5V/12V
Dimensions	147mm x 102mm (5.8" x 4")
Power	12V DC-in by DC-Jack

Operating Temperature	-40°C ~85°C (-40°F ~ 185°F) with heatsink
Devices	WIFI/BT module (option) 3G/GPS module (option)
Software Support	Yocto 2.1 (Kernel 4.1.15) Android 6.0.1
Relative Humidity	10%~90% (non-condensing)
Certification	CE/ FCC Class B

Ordering Information

IBR117	3.5" ARM-based SBC, NXP Cortex™-A9, i.MX 6Dual 1GHz, 1GB DDR, 4GB eMMC, Dual LVDS, HDMI, RS-234/422/485, USB, M.2 Key-E(2230) and Mini PCI-E w/ SIM socket
Heatsink	HSIBR117-A
Cable	LCD403, Panel cable for 7" LCD404, Panel cable for 15" LCD434, Panel cable for 21.5" IVT-76, Backlight for 7" and 15" panel IVT-82, Backlight for 21.5" panel PK1-135, GPIO PK1-133, COM port USB-81, USB OTG cable PK1-100A, Debug cable
RF module	WNFT-234ACN, WiFi/BT M.2 module UC20GC, 3G/GPS mPCIe module
Display	AM-1024600ATMQW-A0H: - 7" Capacitive LVDS TFT LCD, 1024 x 600 M150GNN2 R1: - 15" Capacitive LVDS TFT LCD, 1024 x 768 LM215WF3-SLS1: - 21.5" Transmissive LVDS TFT LCD, Full HD

Remarks: 1. Specifications are subject to change without prior notice. 2. ODM/OEM is available. 3. For user's manual & datasheet download, visit www.ibase.com.tw.