250/350 Watts
EMH Series

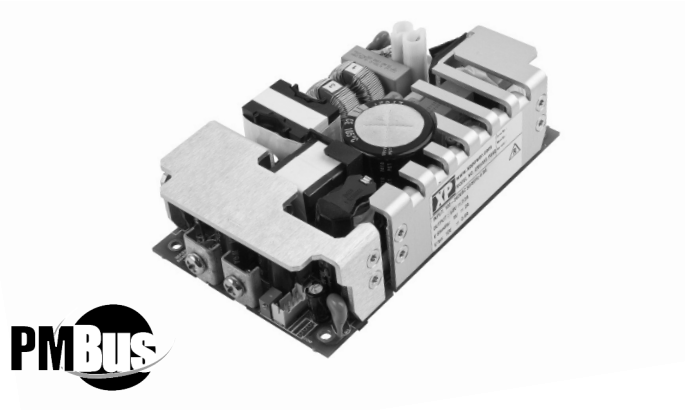

- Industry Standard 3” x 5” x 1.43” Format
- IT & Medical (BF) Approvals
- 80 V – 275 VAC Operation
- Optional ORing Diode (EMH350D Models)
- Analog & PMBus Signals Options (EMH350)
- 5 V Standby (EMH350)
- 3 Year Warranty

Specification

Input

Input Voltage	• 80-275 VAC, derate output power <90 VAC (see derating curve)
Input Frequency	• 47-63 Hz
Input Current	• 2.6 / 3.6 A at 115 VAC typical (250 / 350 W) 1.3 / 1.8 A at 230 VAC typical (250 / 350 W)
Inrush Current	• 40 A max at 230 VAC, cold start 25 °C
Power Factor	• >0.9
Earth Leakage Current	• 250 µA max, 264 VAC, 60 Hz
Patient Leakage Current	• 100 µA max
Input Protection	• 10 AF / 250 V internal fuse in line and neutral

Output

Output Voltage	• 12-48 VDC (see tables)
Output Voltage Trim	• ±10% V1
Initial Set Accuracy	• ±1% V1, ±5% V2
Minimum Load	• No minimum load required
Start Up Delay	• 1 s typical
Start Up Rise Time	• 50 ms
Hold Up Time	• 16 ms typical
Line Regulation	• ±0.5% maximum
Load Regulation	• ±1% V1, ±5% V2
Transient Response	• 4% max. deviation, recovery to within 1% in 500 µs for a 50-75-50% load change
Ripple & Noise	• 1% pk-pk, 20 MHz bandwidth
Overvoltage Protection	• 115-140% Vnom, recycle input to reset
Overtemperature Protection	• Auto reset
Overload Protection	• 110-150%, V1 only
Short Circuit Protection	• Continuous, approximately constant current
Temperature Coefficient	• 0.05% /°C
Remote Sense	• Compensates for up to 0.5 V drop

General

Efficiency	• 87% typical
Isolation	• 4000 VAC input to output 2 x MOPP, 1500 VAC input to ground 1 x MOPP, 1500 VAC output to ground 1 x MOPP
Switching Frequency	• 62-560 /71 /50-130 KHz, PFC /Main /Standby Converter
Power Density	• 11.6 / 16.3 W/in^3 (250 W/ 350 W)
Signals (Option EMH350)	• Power fail, Inhibit, 5 V Standby, Current Share, fan speed control and I^{2}C PMBus Options
MTBF	• 400 kHrs to MIL-HDBK-217F at 25 °C, GB

Environmental

Operating Temperature	• 0 °C to +70 °C, derate linearly from +50 °C at 2.5% / °C to 50% load at +70 °C, For -40 °C cold start, derate power to 100 W max with up to 5 sec start up delay. Full load capable after warm up period of 5 mins. When operating below 0 °C, product may not meet Ripple and Noise or EMC & Safety requirements as stated
Cooling	• Forced cooled 12 CFM
Operating Humidity	• 95% RH, non-condensing
Storage Temperature	• -40 °C to +85 °C
Operating Altitude	• 3000 m
Shock	• 30 g pk, half sine, 6 axes
Vibration	• 2 g rms, 10 Hz to 500 kHz, 3 axes

EMC & Safety

Emissions	• EN55011/22 level B conducted EN55011/22 level A radiated
Harmonic Currents	• EN61000-3-2, class A
Voltage Flicker	• EN61000-3-3
Radiated Immunity	• EN61000-4-3, level 3 Perf Criteria A
EFT/Burst	• EN61000-4-4, level 3 Perf Criteria A
Surge	• EN61000-4-5, installation class 3, Perf Criteria A
Conducted Immunity	• EN61000-4-6, level 3, Perf Criteria A
Dips & Interruptions	• EN61000-4-11, 30% 10 ms, 60% 100 ms, 100% 5000 ms, Perf Criteria A, B, B, EN60601-1-2, 30% 500 ms, 60% 100 ms, 100% 10 ms, 100% 5000 ms, Perf Criteria A, A, A, B - 230 VAC. Consult longform datasheet for 115 V operation.
Safety Approvals	• EN60601-1, ANSI/AAMI ES60601-1, CSA22.2 No.60601-1 per cUL BF Rated, Including Risk Management, EN60950, UL60950

Models and Ratings

Output Voltage V1	Output Current V1	Fan Supply V3	Output Power	Model Number[1]
12 V	21.0 A	12 V/0.6 A	252 W	EMH250PS12
18 V	14.0 A	12 V/0.6 A	252 W	EMH250PS18
24 V	10.5 A	12 V/0.6 A	252 W	EMH250PS24
48 V	5.2 A	12 V/0.6 A	250 W	EMH250PS48

Notes

1. *The EMH250 is available with a top mounted fan cover option. Add suffix '-TF' to model number e.g. EMH250PS12-TF. See mechanical drawing later in this datasheet.*

Mechanical Details

EMH250PSXX

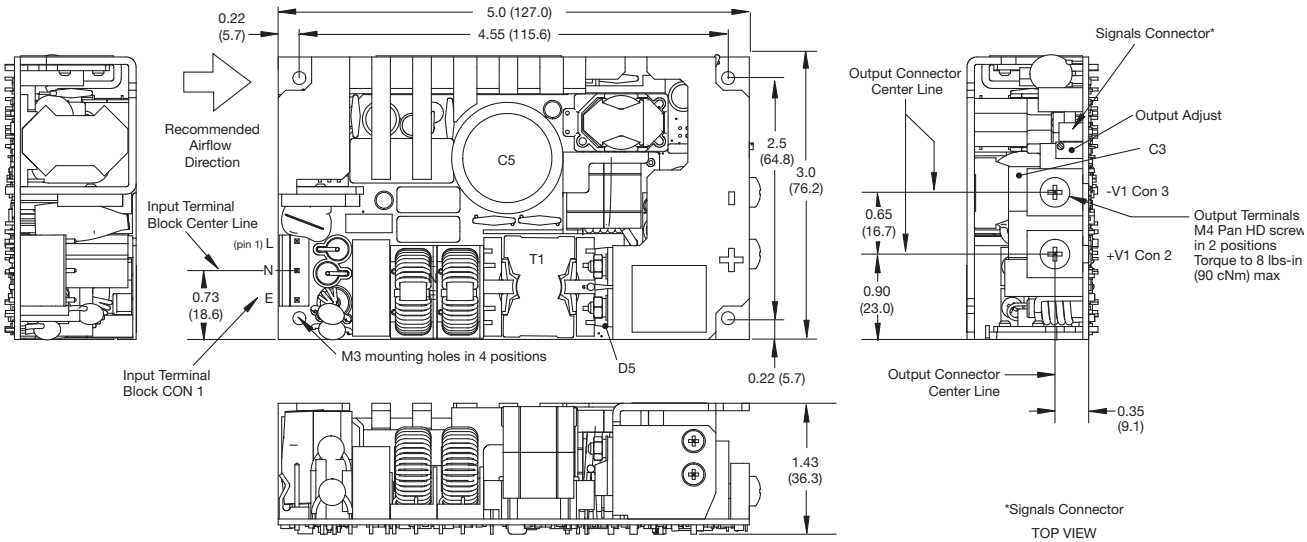

Input Connector CON 1 TYCO part # 640445-5	
Pin 1	Line
Pin 2	Neutral
Pin 3	Earth

Mates with Tyco MTA-156 & SL-156 Product Lines

Output Connector	
Con 2	+V1
Con 3	-V1

*Signals Connector

TOP VIEW

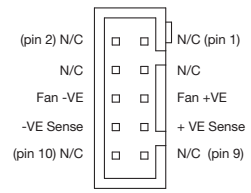

Signals Connector 10 way 2 mm pitch p/n JST BI0B-PHDSS
Mating Half - p/n JST PHDR-10VS,
Contact- 26-22 AWG p/n JST SPHD-001T-P0.5

Notes

1. Dimensions shown in inches (mm).
   Tolerance: ±0.02 (±0.5)
2. Weight: 0.90 lb (410 g).

Derating Curve – All EMH250 & EMH350 Models

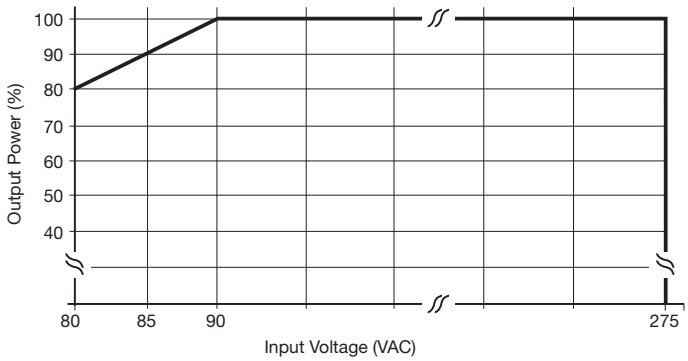

Models and Ratings

Output Voltage V1	Output Current V1	Standby Supply V2	Fan Supply V3	Output Power	Model Number[1]
12 V	29.2 A	5.0 V / 2.0 A	12 V/0.6 A	354 W	EMH350PS12
18 V	19.5 A	5.0 V / 2.0 A	12 V/0.6 A	354 W	EMH350PS18
24 V	14.6 A	5.0 V / 2.0 A	12 V/0.6 A	355 W	EMH350PS24
48 V	7.3 A	5.0 V / 2.0 A	12 V/0.6 A	354 W	EMH350PS48

Notes

1. The EMH350 is available with various analog, digital signal and cover options. See compatibility table and mechanical drawing later in this datasheet.

Mechanical Details

EMH350

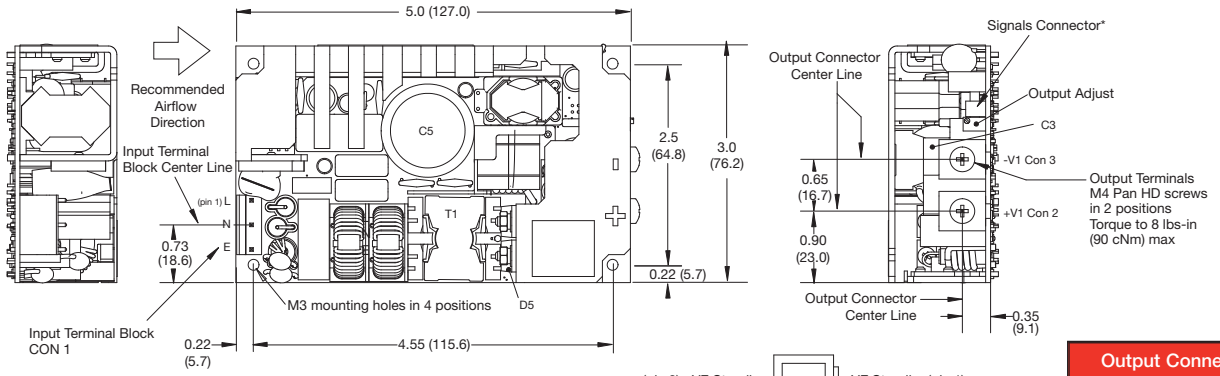

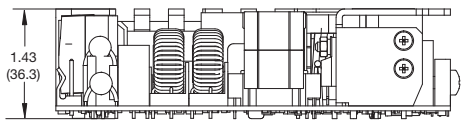

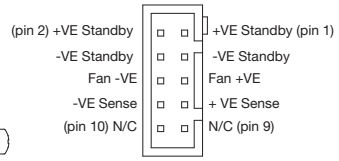

*Signals Connector Top View
Signals Connector 10 way 2 mm pitch p/n JST BI0B-PHDSS
Mating Half - p/n JST PHDR-10VS,
Contact- 26-22 AWG p/n JST SPHD-001T-P0.5

Output Connector	
CON 2	+V1
CON 3	-V1

Input Connector CON 1 TYCO part # 640445-5	
1	Line
2	Neutral
3	Earth

Mates with Tyco MTA-156 & SL-156 Product Lines

EMH350 (Signal Options)

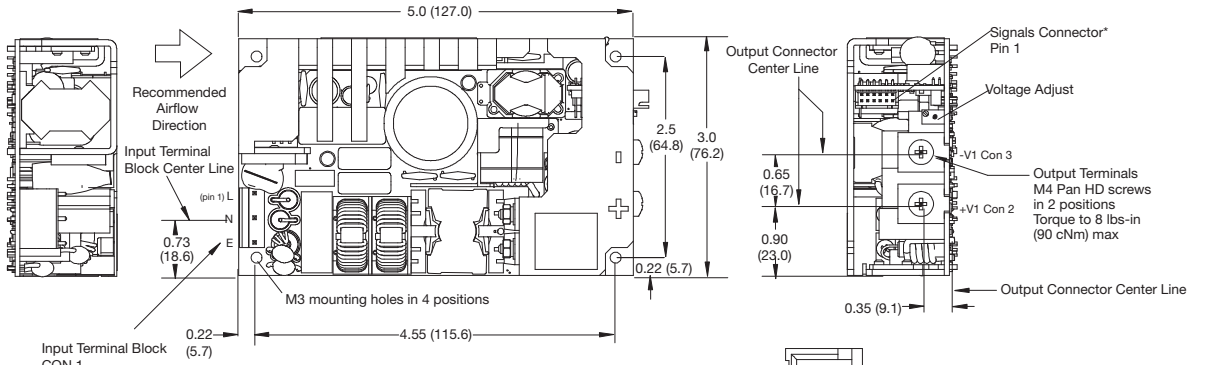

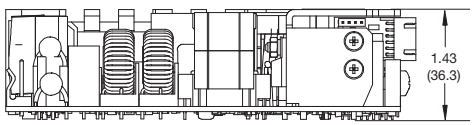

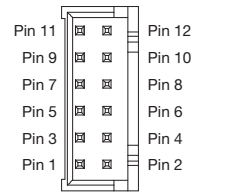

Signals Connector 12 way 2 mm pitch p/n JST S12B-PHDSS
Mating Half - p/n JST PHDR-12VS,
Contact- 26-22 AWG p/n JST SPHD-001T-P0.5

EMH350PSXX-01 & EMH350PSXX-02			
1	-VE Standby	2	-VE Standby
3	+VE Standby	4	+VE Standby
5	+VE Fan Supply	6	-VE Fan Supply
7	+VE Sense	8	-VE Sense
9	Current Share	10	Inhibit
11	Power Fail	12	N/C

EMH350PSXX-50			
1	-VE Standby	2	-VE Standby
3	+VE Standby	4	+VE Standby
5	+VE Fan Supply	6	-VE Fan Supply
7	+VE Sense	8	-VE Sense
9	Fan Tacho Input	10	I²C GND
11	I²C Data	12	I²C Clock

Notes

1. Dimensions shown in inches (mm). Tolerance: ±0.02 (±0.5)
2. Weight: 0.9 lb (410 g).

Models and Ratings

Output Voltage V1	Output Current V1	Standby Supply V2	Fan Supply V3	Output Power	Model Number[1]
12 V	29.2 A	5.0 V / 2.0 A	12 V/0.6 A	354 W	EMH350PS12D
18 V	19.5 A	5.0 V / 2.0 A	12 V/0.6 A	354 W	EMH350PS18D
24 V	14.6 A	5.0 V / 2.0 A	12 V/0.6 A	355 W	EMH350PS24D
48 V	7.3 A	5.0 V / 2.0 A	12 V/0.6 A	354 W	EMH350PS48D

Notes

1. *The EMH350D models are fitted with an integral ORing diode and are also available with various analog and digital signal options. See compatibility table and mechanical drawing later in this datasheet.*

Mechanical Details

EMH350D

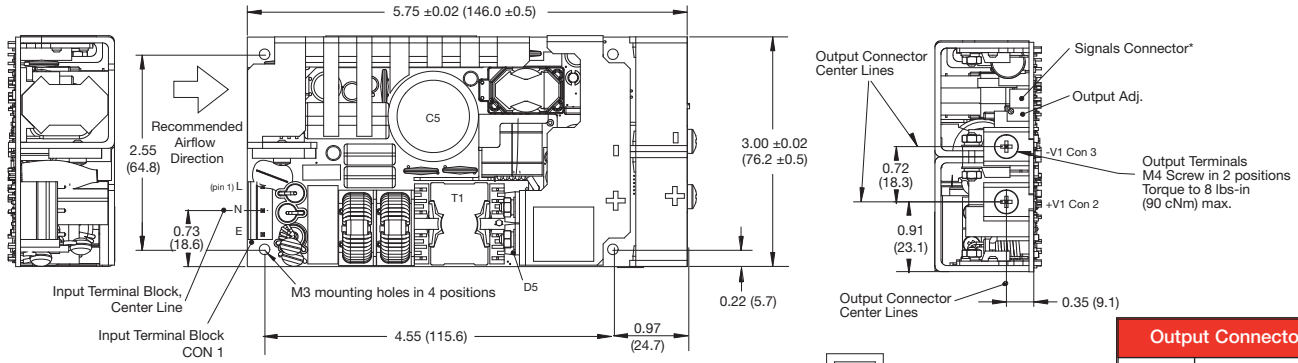

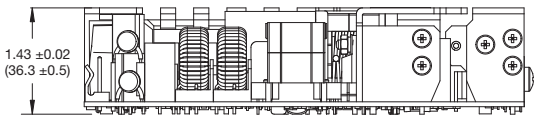

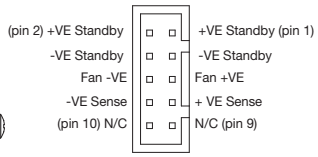

*Signals Connector Top View
Signals Connector 10 way 2 mm pitch part number JST B10B-PHDSS,
Mating half part number JST PHDR-10VS,
Contact 26-22 AWG part number JST SPHD-001T-P0.5

Output Connector	
CON 2	+V1
CON 3	-V1

Input Connector CON 1 TYCO part # 640445-5	
1	Line
2	Neutral
3	Earth

Mates with Tyco MTA-156 & SL-156 Product Lines

EMH350D (Signal Options)

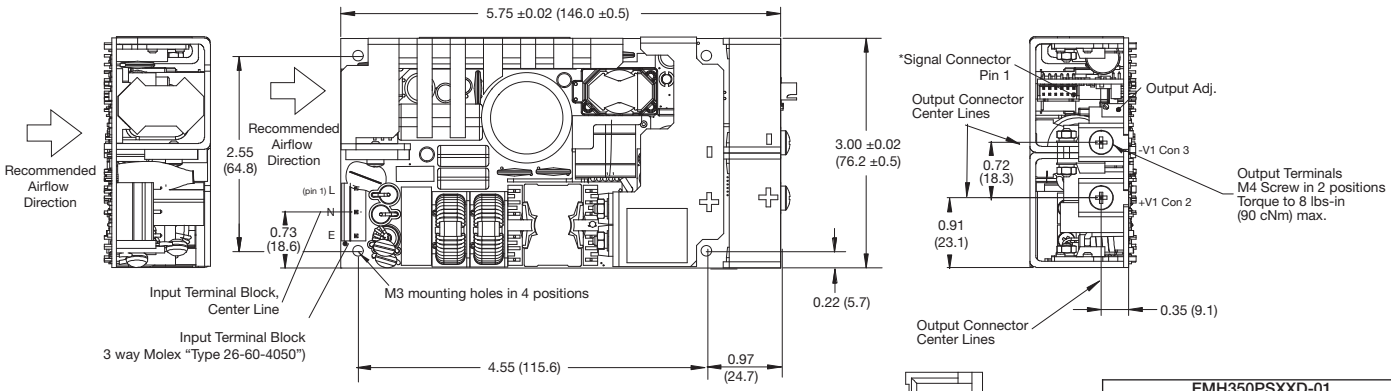

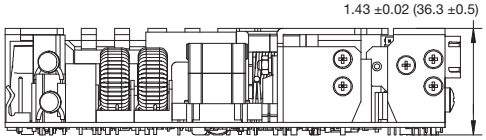

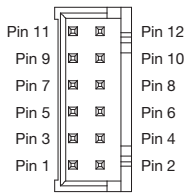

Signals Connector 12 way 2 mm pitch p/n JST S12B-PHDSS
Mating Half - p/n JST PHDR-12VS,
Contact- 26-22 AWG p/n JST SPHD-001T-P0.5

EMH350PSXXD-01			
1	-VE Standby	2	-VE Standby
3	+VE Standby	4	+VE Standby
5	+VE Fan Supply	6	-VE Fan Supply
7	+VE Sense	8	-VE Sense
9	Current Share	10	Inhibit
11	Power Fail	12	N/C

EMH350PSXXD-50			
1	-VE Standby	2	-VE Standby
3	+VE Standby	4	+VE Standby
5	+VE Fan Supply	6	-VE Fan Supply
7	+VE Sense	8	-VE Sense
9	Fan Tacho Input	10	I²C GND
11	I²C Data	12	I²C Clock

Notes

1. Dimensions shown in inches (mm). Tolerance: ±0.02 (±0.5)
2. Weight: 1.0 lbs (450 g).

Signals & Controls

Signals Description & Compatibility

Signal & Cover Options										
Model	Functions								Cover Compatibility	
	Remote Sense	Fan Supply	5 V Standby	AC OK/Power Fail	Inhibit V1 & V Fan	Current Share	Variable Speed Fan Control	PMBus	Standard Top Fan (-TF)	Variable Speed Top Fan (-VF)
EMH250PSXX	✓	✓							✓	
EMH350PSXX	✓	✓	✓						✓	
EMH350PSXX-01	✓	✓	✓	✓	✓	✓			✓	
EMH350PSXX-02	✓	✓	✓	✓	✓	✓	✓			✓
EMH350PSXX-50	✓	✓	✓					✓	✓	
EMH350PSXXD	✓	✓	✓							
EMH350PSXXD-01	✓	✓	✓	✓	✓	✓				
EMH350PSXXD-50	✓	✓	✓					✓		

Characteristic	Notes & Conditions
Signals & Control	
Remote Sense	Compensates for 0.5 V total voltage drop
12 V Fan Supply (V3)	12 V/0.6 A supply, present when AC supplied, inhibit turns fan supply off.
5V Standby (V2)	5 V/2 A supply, always present when AC supplied
AC OK/Power Fail	AC OK is an open collector transistor, referenced to negative sense, providing a minimum of 3 ms warning of loss of output regulation. The transistor is normally off when AC is healthy. See fig. 1.
Inhibit	The inhibit high pin should be pulled below 0.4 V to switch V1 & V Fan (V3) off. Open circuit or 2-8 V maximum to switch the output on. See fig. 2.
Current Share	Connecting pin 9 (-01 & -02 models) of like voltage units (3 maximum) will force the current to share between the outputs. Units share current within 10% of each other at full load. See fig. 3.
Variable Speed Fan Control	When used in conjuction with -VF fan cover, varies the speed of the fan depending on temperature of the unit. See longform datasheet for details.
I²C/PMBus	The I²C PMBus compatible interface can be used for monitoring the unit output voltage, current, internal temperature, external 3 wire TACHO fan and run time. Adjustment of the output voltage and current limit set point and identification of the unit model number and serial number are also possible. See longform datasheet for full details.

AC OK/Power Fail

Figure 1.

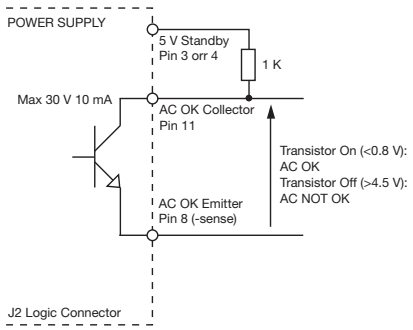

Inhibit

Figure 2.

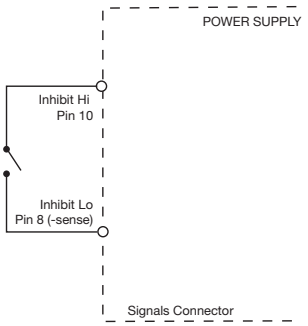

Parallel Load & Current Share

Figure 3.

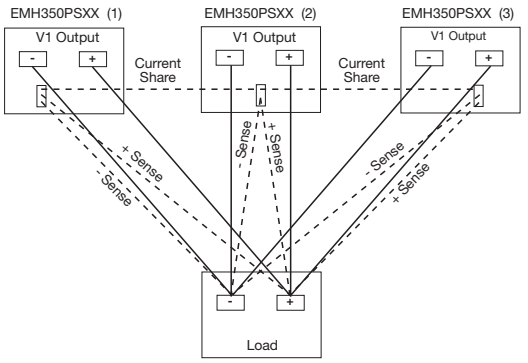

Mechanical Details

Top Fan – EMH250–TF & EMH350–TF

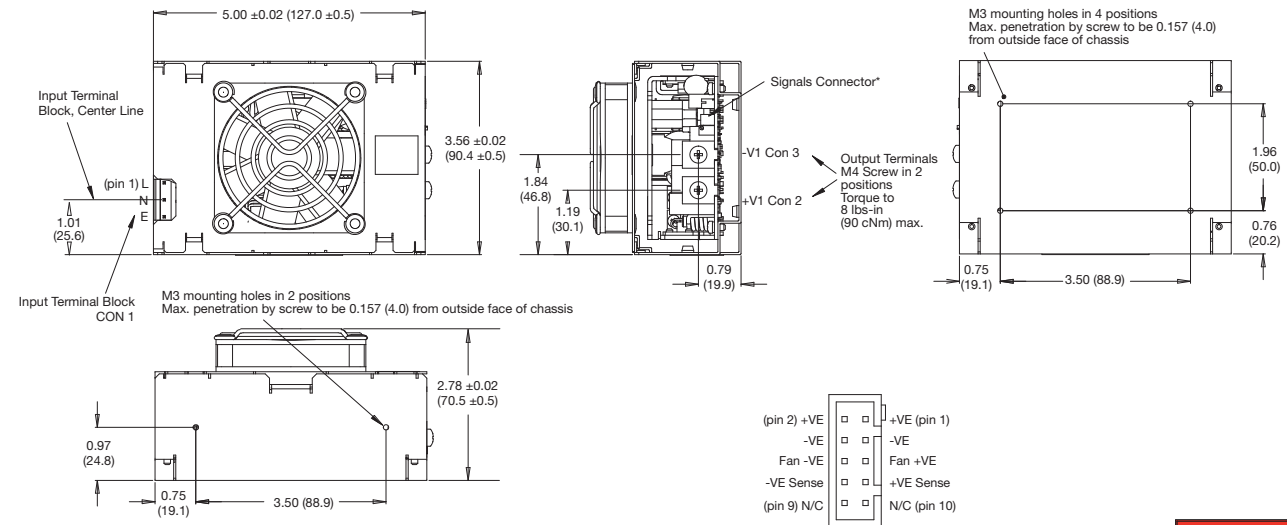

Signals Connector

Signals Connector 10 way 2 mm pitch
part number JST B10B-PHDSS
Mating half part number JST PHDR-10VS
Contact 26-22 AWG part number JST SPHD-001T-P0.5

Output Connector	
CON 2	+V1
CON 3	-V1

Input Connector CON 1 TYCO part # 640445-5	
1	Line
2	Neutral
3	Earth

Mates with Tyco MTA-156 & SL-156 Product Lines

Top Fan with Signals Options – EMH350–01TF, EMH350–50TF & EMH350–02VF

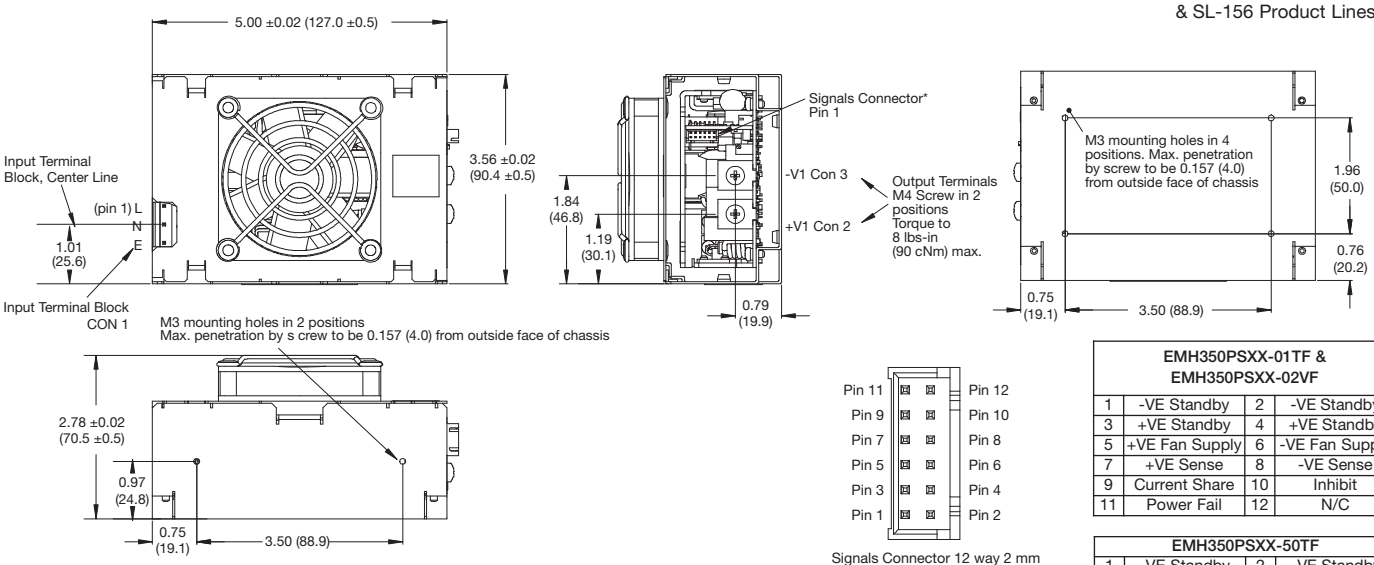

Signals Connector 12 way 2 mm pitch p/n JST S12B-PHDSS
Mating Half - p/n JST PHDR-12VS,
Contact- 26-22 AWG p/n JST SPHD-001T-P0.5

EMH350PSXX-01TF & EMH350PSXX-02VF			
1	-VE Standby	2	-VE Standby
3	+VE Standby	4	+VE Standby
5	+VE Fan Supply	6	-VE Fan Supply
7	+VE Sense	8	-VE Sense
9	Current Share	10	Inhibit
11	Power Fail	12	N/C

EMH350PSXX-50TF			
1	-VE Standby	2	-VE Standby
3	+VE Standby	4	+VE Standby
5	+VE Fan Supply	6	-VE Fan Supply
7	+VE Sense	8	-VE Sense
9	Fan Tacho Input	10	I²C GND
11	I²C Data	12	I²C Clock

Notes

1. Dimensions shown in inches (mm). Tolerance: ±0.02 (±0.5)
2. Weight: 1.67 lbs (760 g).