# 750-586

## 2-Channel Analog Output Module 4-20 mA, Ex i

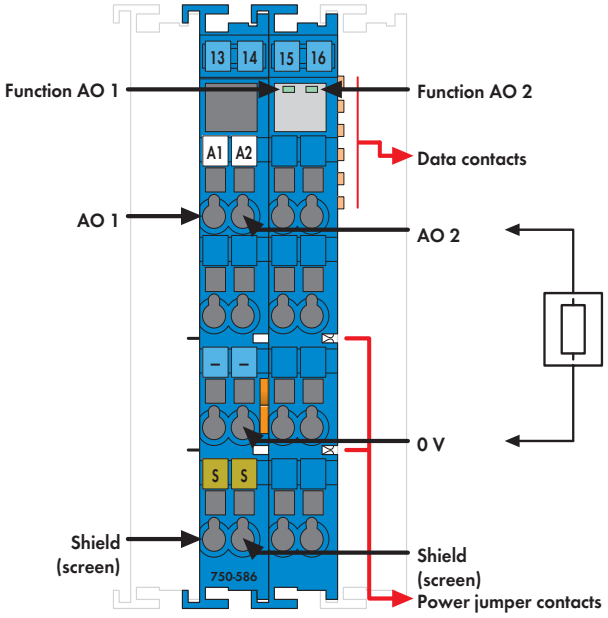


The analog output module transmits intrinsically safe 4-20mA signals in the hazardous Zone 0+1.
The WAGO-I/O-SYSTEM 750 must be installed either in Zone 2 or in a non-hazardous area.
Power is derived from the power jumper contacts.
The outputs are short-circuit proof.

LED indicators:
- Green LED (output status)

An optocoupler provides electrical isolation between the bus and the field side.

**Note:**

Only use the analog output module in connection with the 24VDC Ex i Supply Module (note the power supply instructions)!

General information (e.g., installation regulations) on explosion protection is available in the WAGO-I/O-SYSTEM 750 manuals!

| Description | Item No. | Pack. Unit |
|---|---|---|
| **2AO 4-20 mA Ex i** | **750-586** | 1 |

| Accessories | | Item No. | Pack. Unit |
|---|---|---|---|
| **Miniature WSB Quick marking system** | | | |
| | plain | **248-501** | 5 |
| | with marking | see Full Line Catalog AUTOMATION 2012/2013 | |

| Technical Data | |
|---|---|
| No. of outputs | 2 |
| Max. current consumption (internal) | 21 mA |
| Voltage via power jumper contacts | Supply via 24 V DC Ex i supply module |
| Signal current | 4 mA ... 20 mA |
| Load impedance | < 500 Ω |
| Linearity | ± 2 LSB |
| Resolution | 12 bits |
| Conversion time | < 2 ms |
| Measuring error (25 °C) | < ± 0.2 % of the full scale value |
| Temperature coefficient | < ± 0.01 % / K of the full scale value |
| Current consumption typ. (field side) | 19 mA / module + load (2 x 20 mA) |
| Power consumption P (max.) | 1.5 W |
| Power loss $P_V$ | 0.9 W |
| Isolation | 375 V system/supply |
| Bit width | 2 x 16 bits data |

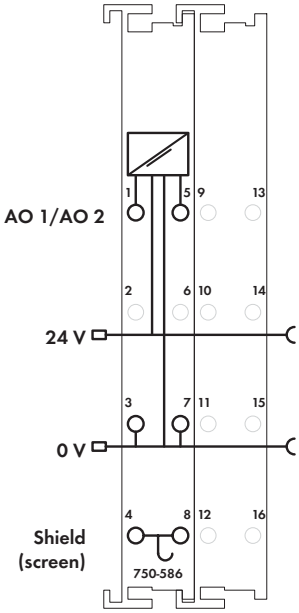


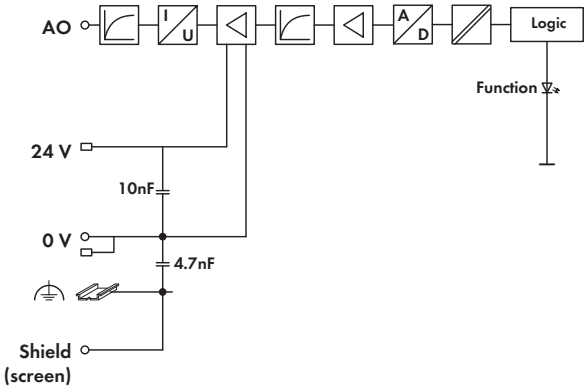


## Technical Data

| | |
|---|---|
| Wire connection | CAGE CLAMP® |
| Cross sections | 0.08 mm² ... 2.5 mm² / AWG 28 ... 14 |
| Strip lengths | 8 ... 9 mm / 0.33 in |
| Width | 24mm |
| Weight | 91.6 g |
| EMC: CE - immunity to interference | acc. to EN 61000-6-2 (2005) |
| EMC: CE - emission of interference | acc. to EN 61000-6-4 (2007) |

## Explosion Protection

| | |
|---|---|
| Ex directive 94 / 9 / EG | EN 60079-0:2012, EN 60079-11:2007, EN 60079-15:2010, EN 60079-31:2009 |
| Electric circuit, safety-relevant data | $V_0$ = 27.3 V ; $I_0$ = 57.5 mA; $P_0$ = 392 mW; Characteristic: Linear |
| Reactances Ex ia IIC | $L_0$ = 11 mH; $C_0$ = 88 nF |
| Reactances Ex ia IIB | $L_0$ = 56 mH; $C_0$ = 680 nF |
| Reactances Ex ia I | $L_0$ = 110 mH; $C_0$ = 3.5 µF |
| | (The above-listed ratings do not account for the coincidental occurrence of capacitances and inductances. For ratings taking the coincidental occurrence of capacitances and inductances into account, see manual) |

## Standards, Guidelines and Approvals

| | |
|---|---|
| EC EMC guideline | 2004/108/EC |
| EC low voltage guideline | 2006/95/EC |
| Conformity marking | CE |
| Shipbuilding | pending |
| UL 508 | |
| ANSI/ISA 12.12.01 | pending |
| TÜV 07 ATEX 554086 X | I M2 (M1) Ex d [ia Ma] I Mb, II 3 (1) G Ex nA [ia Ga] IIC T4 Gc, II 3 (1) D Ex tc [ia Da] IIIC T135°C Dc |
| Permissible ambient temperature: 0 °C ≤ $T_A$ ≤ +60 °C | |
| TUN 09.0001X | Ex d [ia Ma] I Mb, Ex nA [ia Ga] IIC T4 Gc, Ex tc [ia Da] IIIC T135°C Dc |
| Permissible ambient temperature: 0 °C ≤ $T_A$ ≤ +60 °C | |