MODBUS Fieldbus Coupler

RS 232/485; 150 (1200) baud ... 19.2 (115.2) Kbaud; digital and analog signals



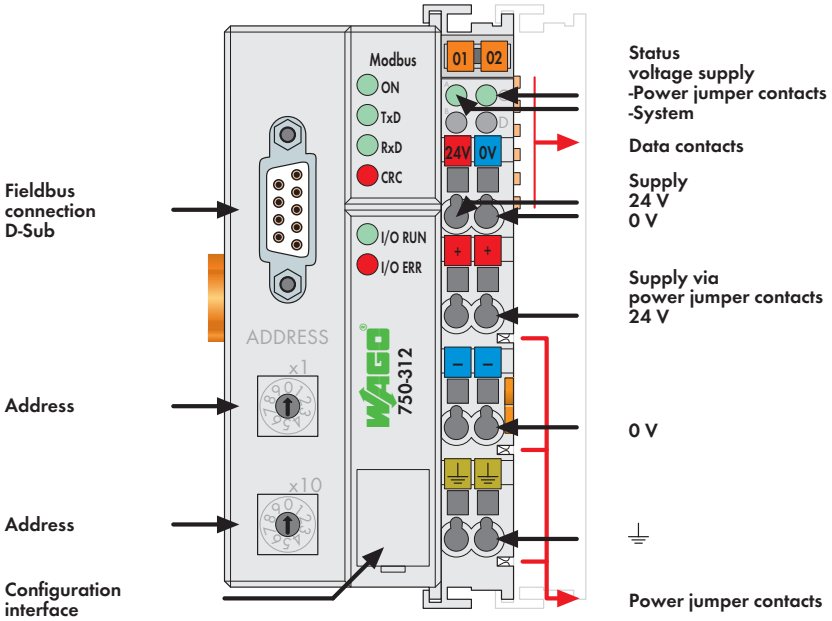

This buscoupler allows connection of the WAGO-I/O-SYSTEM as a slave to the MODBUS fieldbus.
The buscoupler automatically configures, creating a local process image which may include analog, digital or specialty modules. Analog and specialty module data is sent via words and/or bytes, digital data is sent bit by bit.

The data of the analog modules is stored in the process image which is created automatically according to the order in which the modules are connected to the buscoupler. The bits of the digital modules are sent byte by byte and added to the analog data. If the amount of digital information exceeds 8 bits, the buscoupler automatically starts with a new byte.

When implementing new installations, please consider 750-812, 750-814, 750-815 and 750-816 Fieldbus Controllers (page 86) with extended functions.

Description	Item no.	Pack. unit
MODBUS / RS 485 / 150 ... 19200 Bd	**750-312**	1
MODBUS / RS 232 / 150 ... 19200 Bd	**750-314**	1
MODBUS / RS 485 / 1.2 ... 115.2 kBd	**750-315**	1
MODBUS / RS 232 / 1.2 ... 115.2 kBd	**750-316**	1

Accessories		Item no.	Pack. unit
Miniature WSB quick marking system,			
	plain	**248-501**	5
	with marking	see pages 256 ... 257	

Approvals

Conformity marking	CE
UL 508	
ANSI/ISA 12.12.01	Class I, Div. 2, Grp. ABCD, T4
EN 60079-15	I M2 / II 3 GD Ex nA nL IIC T4
	BR-Ex nA II T4
Marine applications	see "Approvals Overview" in section 1

System Data

No. of couplers connected to Master	99 with repeater
Max. no. of I/O points	ca. 6000 (depends on master)
Transmission medium	Shielded Cu cable 2 (4) x 0.25 mm²
Max. length of fieldbus segment	1200 m (depends on baud rate/cable)
Baud rate	150 (1200) baud ... 19.2 (115.2) Kbaud
Buscoupler connection	1 x D-Sub 9; socket

WAGO Kontakttechnik GmbH & Co. KG
Postfach 2880 • D-32385 Minden Tel.: +49(0)571/887-0 E-Mail: info@wago.com
Hansastr. 27 • D-32423 Minden Fax: +49(0)571/887-169 www.wago.com

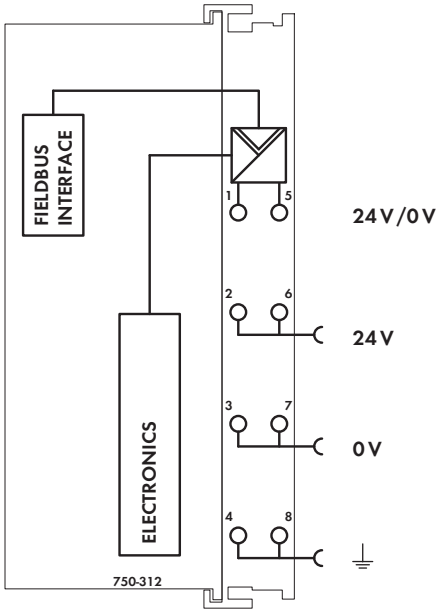

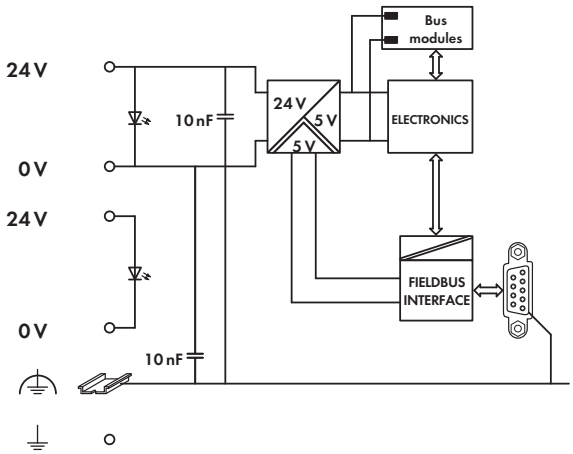

Technical Data

Number of I/O modules	64
Fieldbus	
Max. input process image	512 bytes
Max. output process image	512 bytes
Configuration	DIP switch and 2 decimal coders or via PC or PLC
Voltage supply	DC 24 V (-25 % ... +30 %)
Max. input current (24 V)	500 mA
Efficiency of the power supply	87 %
Internal current consumption (5 V)	350 mA
Total current for I/O modules (5 V)	1650 mA
Isolation	500 V system/supply
Voltage via power jumper contacts	DC 24 V (-25 % ... +30 %)
Current via power jumper contacts (max.)	DC 10 A

General Specifications

Operating temperature	0 °C ... +55 °C
Wire connection	CAGE CLAMP®
Cross sections	0.08 mm² ... 2.5 mm² / AWG 28 ... 14
Stripped lengths	8 ... 9 mm / 0.33 in
Dimensions (mm) W x H x L	51 x 65 x 100
	Height from upper-edge of DIN 35 rail
Weight	199 g
Storage temperature	-25 °C ... +85 °C
Relative air humidity (no condensation)	95 %
Vibration resistance	acc. to IEC 60068-2-6
Shock resistance	acc. to IEC 60068-2-27
Degree of protection	IP20
EMC CE-Immunity to interference	acc. to EN 50082-2 (1996)
EMC CE-Emission of interference	acc. to EN 50081-1 (1993)
EMC marine applications -	
Immunity to interference	acc. to Germanischer Lloyd (2003)
EMC marine applications -	
Emission of interference	acc. to Germanischer Lloyd (2003)