NEW

TDK

GENESYS™ Series

Programmable DC Power Supplies

1.7kW-5kW in 1U 0-600V / 0-500A

10kW in 2U / 15kW in 3U / 0-1500A

Built-in LAN (LXI 1.5), USB, RS-232 & RS-485 Interfaces

Built-in Remote Isolated Analog Program/Monitor/Control Interface

Scalable Power Systems up to 20kW

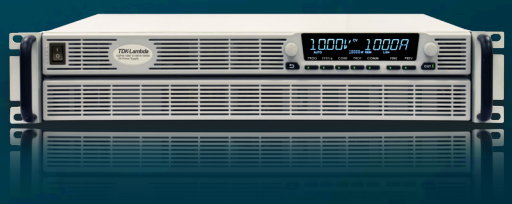

TDK·Lambda

The GENESYS™ family of programmable power supplies sets a new standard for flexible, reliable, AC/DC power systems in OEM, Industrial and Laboratory applications.

Features include:

The ™ family of programmable power supplies sets a new standard for flexible, reliable, AC/DC power systems in OEM, Industrial and Laboratory applications

Features include:

- Leading DC Programmable power density (5kW in 1U height) in 19" rack-mount
- Light-weight <7.5 Kg
- Wide Range of popular worldwide AC inputs:
  G5kW: 3ø (208VAC, 400VAC & 480VAC), Wide-range 3ø 480VAC (342VAC ~ 528VAC)
  G1.7kW: 1ø (85~265VAC)
- Active three-phase PFC (0.94 typical)
- Output Voltage up to 600V, Current up to 1500A
- Built-in LAN (LXI 1.5), USB, RS-232/RS-485 Interface
- Multi-Drop capability (RS-485)
- Multi-functional front panel display
- Last-Setting Memory
- Auto-Start / Safe-Start: user selectable
- High Resolution 16 bit ADCs & DACs
- Arbitrary Waveform Generator with Auto-Triggering
- Store up to 100 steps into four internal memory cells
- High-speed Programming
- Constant Voltage/Constant Current operation modes
- Constant Power (CP) Limit
- Slew-Rate Control (V/I)
- Internal Resistance Simulation
- Local / Remote Sensing - software controlled
- Built-In Isolated Analog Program/Monitor and Control
- Protection functions (OVP, UVP, UVL, FOLD (CV/CC), OCL, OTP, AC FAIL)
- Fan speed profile controlled by ambient temperature and load
- Certified LabWindows™/CVI, LabVIEW™, and IVI Drivers
- Optional IEEE Interface
- 19" Rack Mount capability for ATE and OEM application
- Scalable Power Systems of 10kW and 15kW
- Parallel Systems (up to 20kW) with Auto-Configure
- Worldwide Safety Agency approvals
- CE Mark for Low Voltage, EMC and RoHS2 Directives

TÜVRheinland CERTIFIED · GS geprüfte Sicherheit · c UL us LISTED · CE · RoHS2

- Five year warranty

Applications

GENESYS™ power supplies have been designed to meet the demands of a wide variety of applications.

Test & Measurement systems, Component Device Testing, Manufacturing and process control.

Semiconductor Processing & Burn-In, Aerospace & Satellite Testing, Medical Imaging, Green Technology.

Higher power systems can be configured with up to four 5kW units. Each unit is 1U with zero space between them (zero stack).

OEM Designers have a wide variety of Inputs and Outputs from which to select depending on application and location.

G1.7kW-5kW Front Panel Description

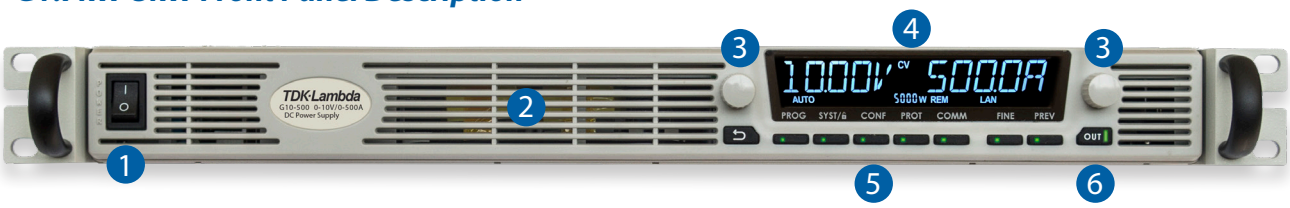

1. Input Power ON/OFF Switch
2. Air Intake allows zero stacking for maximum system flexibility and power density.
3. Reliable Detent Encoders for settings and Menu navigation.
4. High Contrast/Brightness display with wide viewing angle, 16 segment LCD
5. Function/Status LEDs: Active modes and function indicators
6. Pushbuttons allow flexible user configuration

G1.7kW-5kW Rear Panel Description

1. Isolated Analog Programming, Monitoring and other control connector (DB26 Female)
2. USB Interface connector (Type B).
3. RS-232/RS-485 IN/OUT Remote Digital Interface (RJ-45 type) for Multi-Drop connection
4. LAN (LXI 1.5) Interface connector (RJ-45 type with LAN status indicators).
5. Auto paralleling Bus connectors (mini I/O type) for connecting Master unit-to-Slave and slave unit-to-slave unit.
6. Remote/Local Output Voltage Sense Connections (spring cage).
7. Output Connections: Rugged busbars (shown) for models up to 100V Output;
   Plug connector: PHOENIX CONTACT IPC 5/4-STF-7.62 for models with Outputs >100V.
8. G5kW Input: 208VAC, 400VAC & 480VAC Three Phase, 50/60 Hz. (Model shown)
   AC Input Plug Connector: PHOENIX CONTACT Power Combicon PC 5/4-STCL1-7.62 Series with strain relief.

   G1.7kW Input: 85~265VAC, Single Phase, 50/60 Hz.
   AC Input Plug Connector: PHOENIX CONTACT Power Combicon PC 5/3-STCL1-7.62 Series with strain relief.
9. Optional Interface Position for IEEE 488.2 SCPI or AnyBus Interface.
10. Exhaust air assures reliable operation when units are zero stacked.
11. Functional Ground connection (M4x8mm stud).

GSP10kW Front Panel Description

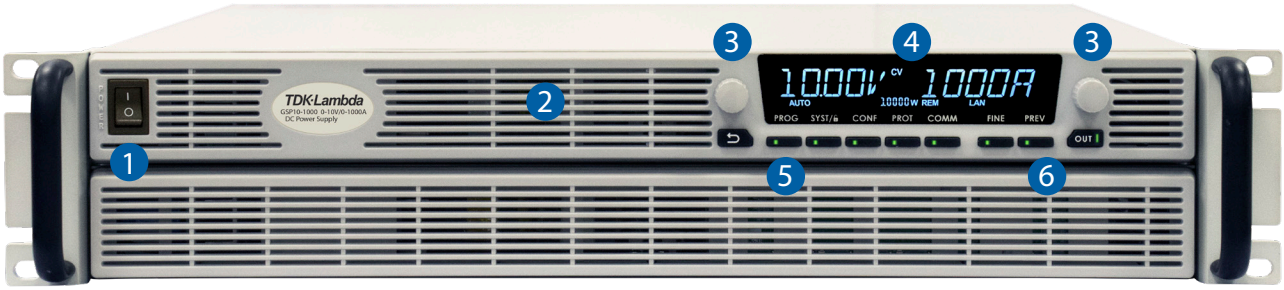

1. Input Power ON/OFF Switch
2. Air Intake allows zero stacking for maximum system flexibility and power density.
3. Reliable Detent Encoders for settings and Menu navigation.
4. High Contrast/Brightness display with wide viewing angle, 16 segment LCD
5. Function/Status LEDs: Active modes and function indicators
6. Pushbuttons allow flexible user configuration

GSP10kW Rear Panel Description

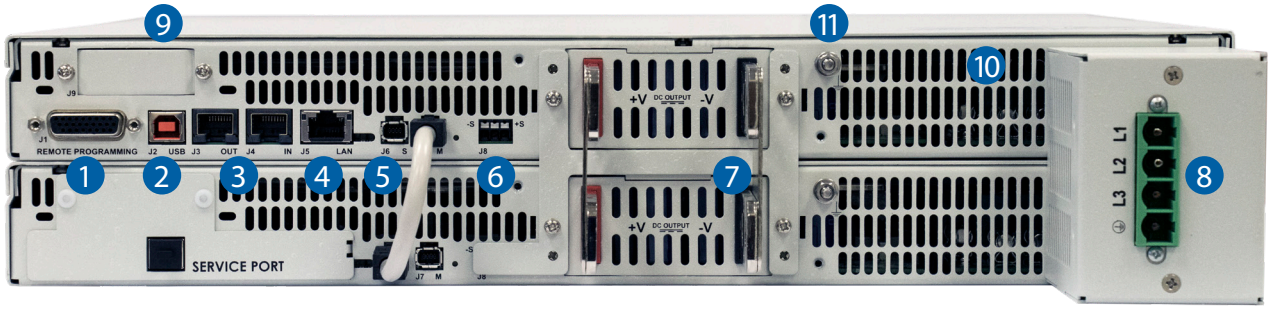

1. Isolated Analog Programming, Monitoring and other control connector (DB26 Female)
2. USB Interface connector (Type B).
3. RS-232/RS-485 IN/OUT Remote Digital Interface (RJ-45 type) for Multi-Drop connection
4. LAN (LXI 1.5) Interface connector (RJ-45 type with LAN status indicators).
5. Auto paralleling Bus connectors (mini I/O type) for connecting Master unit-to-Slave and slave unit-to-slave unit.
6. Remote/Local Output Voltage Sense Connections (spring cage).
7. Output Connections: Rugged busbars (shown) for models up to 100V Output;
   Plug connector: PHOENIX CONTACT DFK-IPC 16/4-STF-10.16 for models with Outputs >100V.
8. Input: 208VAC, 400VAC & 480VAC Three Phase, 50/60 Hz.
   AC Input Plug Connector: PHOENIX CONTACT DFK-IPC 16/4-STF-10.16 with strain relief.
9. Optional Interface Position for IEEE 488.2 SCPI or AnyBus Interface.
10. Exhaust air assures reliable operation when zero stacked.
11. Functional Ground connection (M4x8mm stud).

GSP15kW Front Panel Description

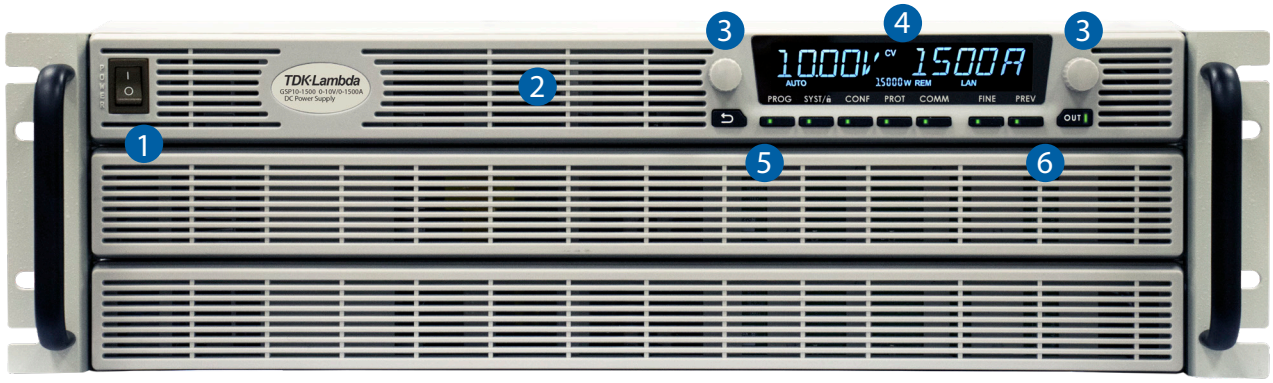

1. Input Power ON/OFF Switch
2. Air Intake allows zero stacking for maximum system flexibility and power density.
3. Reliable Detent Encoders for settings and Menu navigation.
4. High Contrast/Brightness display with wide viewing angle, 16 segment LCD
5. Function/Status LEDs: Active modes and function indicators
6. Pushbuttons allow flexible user configuration

GSP15kW Rear Panel Description

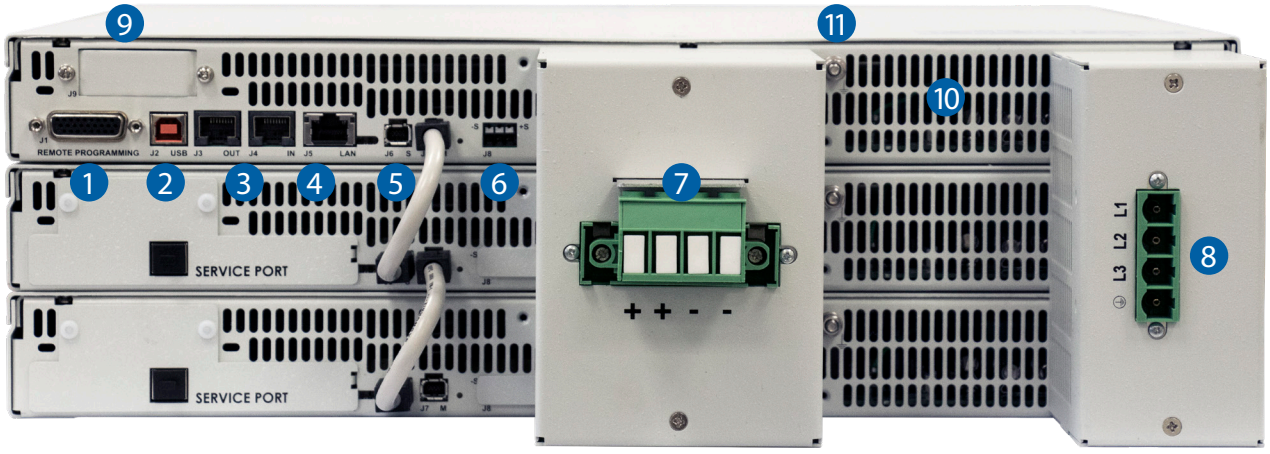

1. Isolated Analog Programming, Monitoring and other control connector (DB26 Female)
2. USB Interface connector (Type B).
3. RS-232/RS-485 IN/OUT Remote Digital Interface (RJ-45 type) for Multi-Drop connection
4. LAN (LXI 1.5) Interface connector (RJ-45 type with LAN status indicators).
5. Auto paralleling Bus connectors (mini I/O type) for connecting Master unit-to-Slave and slave unit-to-slave unit.
6. Remote/Local Output Voltage Sense Connections (spring cage).
7. Output Connections: Rugged busbars for models up to 100V Output;
   Plug connector: PHOENIX CONTACT DFK-IPC 16/4-STF-10.16 for models with Outputs >100V (shown).
8. Input: 208VAC, 400VAC & 480VAC Three Phase, 50/60 Hz.
   AC Input Plug Connector: PHOENIX CONTACT DFK-PC 16/4-ST-10.16 with strain relief.
9. Optional Interface Position for IEEE 488.2 SCPI or AnyBus Interface.
10. Exhaust air assures reliable operation when zero stacked.
11. Functional Ground connection (M4x8mm stud).

Front Panel Display MENU/CONTROL buttons:

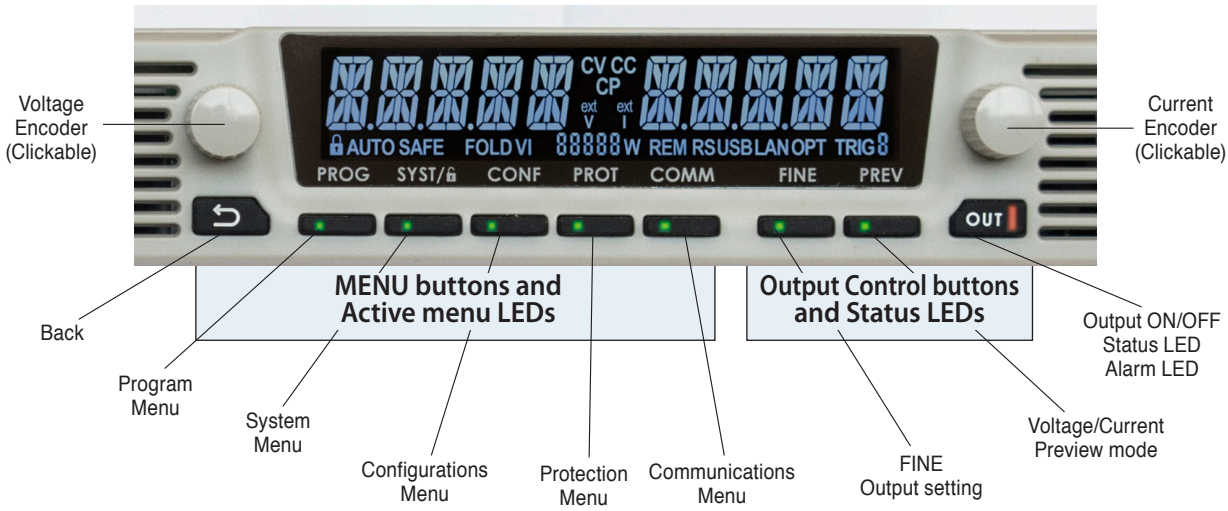

Front Panel Display indicators

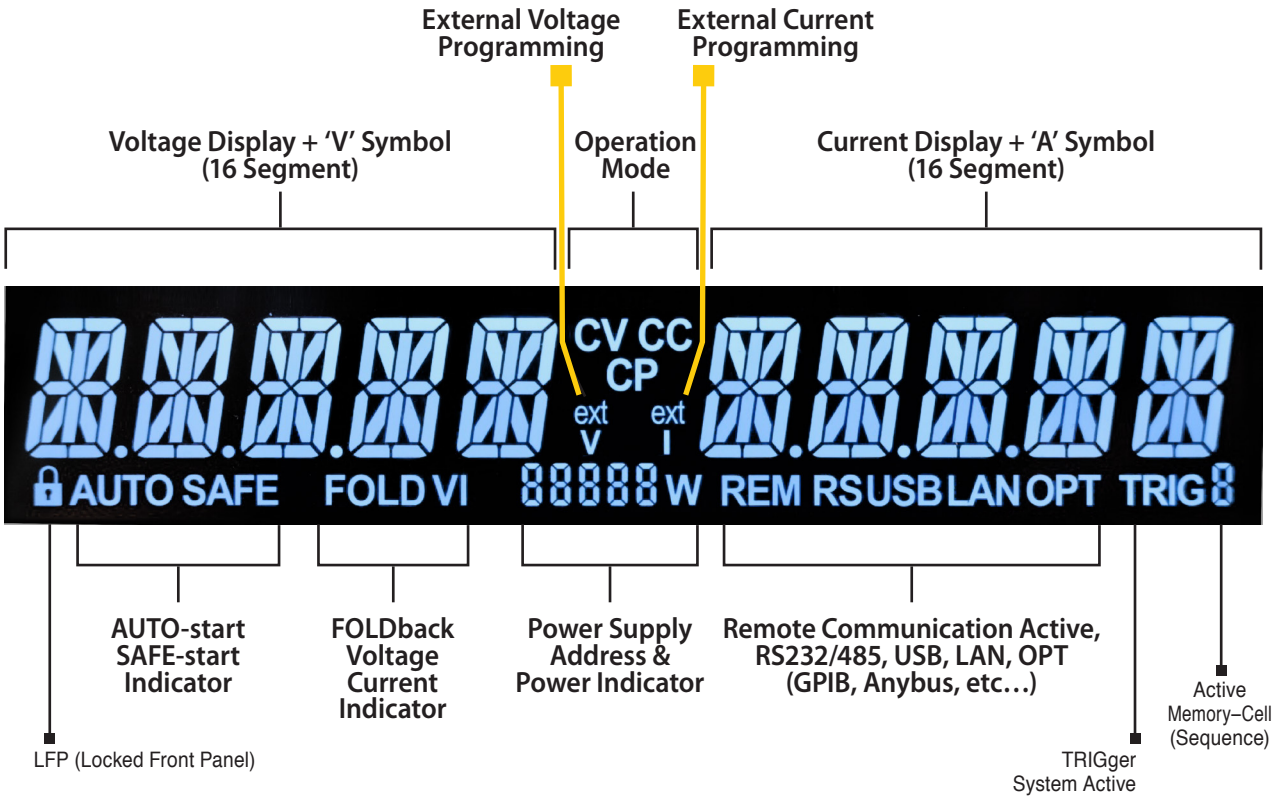

GENESYS™ G&GSP Series
Blank Front Panel

A Blank Front Panel is available for applications where the front panel display and controls are not required and only remote interface (Digital/Analog) is needed.

The Blank Front Panel option has all the standard product functions and features except the display.

The power supply can be controlled via the rear panel Remote digital interface (LAN, USB, RS-232/RS-485) or via the remote Isolated Analog interface.

GENESYS™ Parallel and Series Configurations

Parallel operation - Master/Slave:

Auto paralleling Scalable Master-Slave Operation.

Active current sharing allows up to four identical units to be connected

Total real current is programmed measured and reported by the Master. Up to four supplies operate as one.

Separates Parallel Kit available for 20kW (4 unit) systems allowing easy system setup.

Order P/N: G/P - 4U

Standard Unit - zero stacked up to 4 units

Standard & Blank - zero stacked up to 4 units

Series operation

Two units may be connected in series to increase the output voltage or to provide bipolar output. (Max 600V to Chassis Ground).

Multi-Drop Remote Programming via Communication Interface

Standard Built-in LAN, USB, RS-232 & RS-485 allows "Multi-Drop" daisy-chain control of up to 31 Power supplies on the same communication bus. Can be Daisy chained via built-in RS-485 Interface.

- First unit is LAN, USB, RS-232, RS-485, etc.
- All other units use RS-485 daisy chain with linking cable.

LAN, USB, RS-232, RS-485, IEEE, AnyBus

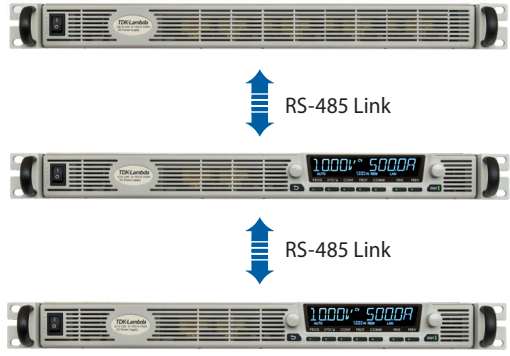

Graphical User Interface

Advanced "Virtual Front Panel" allows programming and monitoring unit(s) with or without front panel display.

1. **Control and monitor up-to 31 units with "Address" bar**
2. **Front panel set-up menu control (PROGram, SYSTem, CONFiguration, PROTection and COMMnication)**
3. **Informative "Parameters" status bar**
4. **Individual unit and Global command control**
5. **Data logging including errors, events and recovery**
6. **Realtime Graph and Waveform creator, store/load sequence.**
7. **Solar array mode - calculate MPP (Max Peak Power) for solar array.**
8. **Registers View: Operation Status, Fault, Event Status, ENABLE and INTERLOCK signals.**
9. **Remote communication state LOC, REM, LLO.**
10. **Programmed signals 1&2**

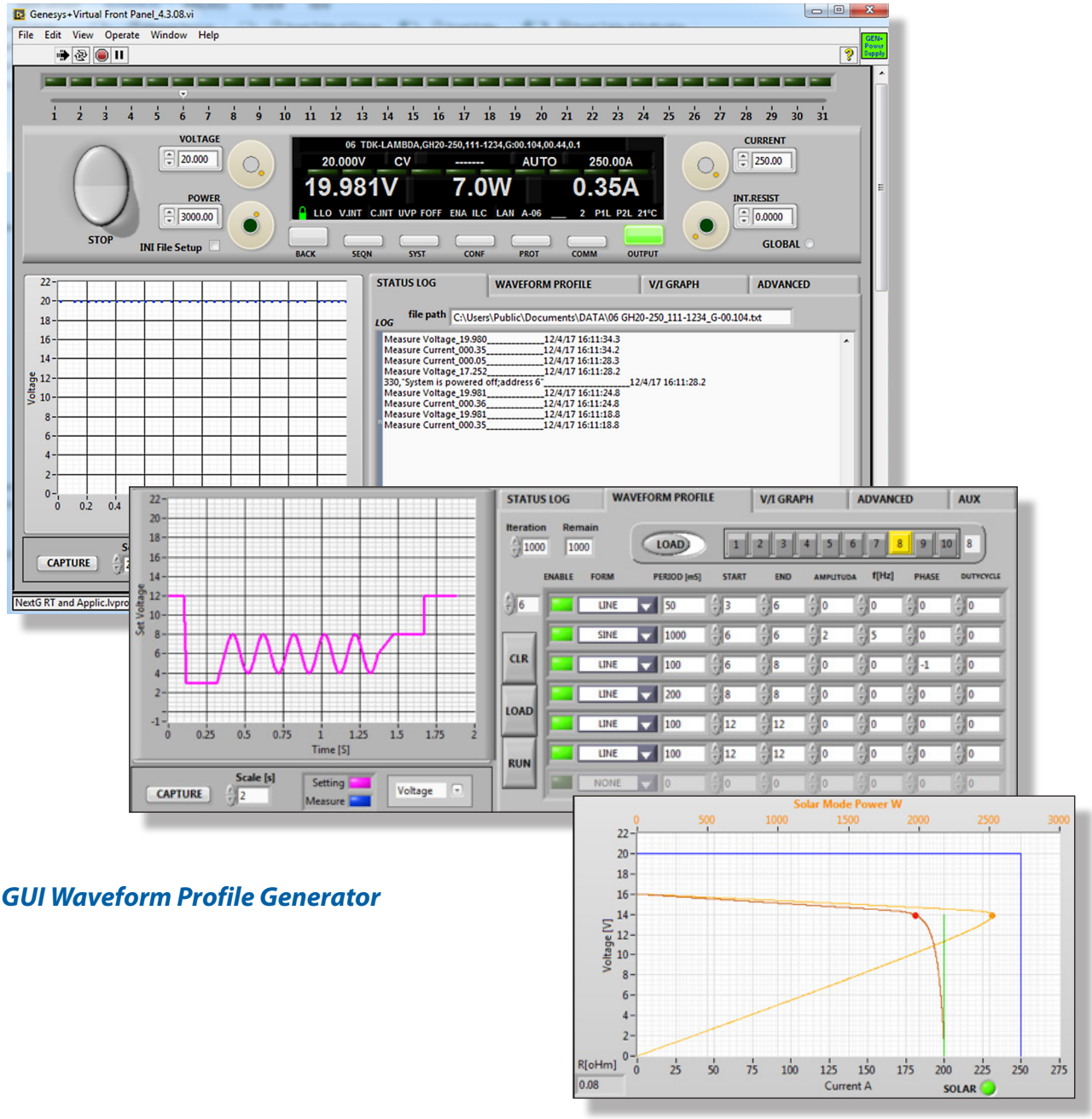

GUI Waveform Profile Generator

How to order G1.7kW - Power Supply Identification / Accessories

G	10	-	170	-		-	
Series Name	Output Voltage (0~10V)		Output Current (0~170A)		Interface Options		Accessories Options
Front Panel Type							M - Printed *User Manual
Empty: standard							* User Manual & GUI are provided on CD as Standard
B: Blank Front Panel							P - Bus Parralleling Cable

AC Inputs (All Models)

1Ø, 85 ~ 265Vac

Interface Options (Factory installed)	P/N	
LAN (LXI 1.5 compliant with Multi-Drop capability)- built-in	-	
USB 2.0 compliant with Multi-Drop capability - built-in	-	
RS-232/RS-485 - built-in	-	
Isolated Analog Program/Monitor Interface (5V/10V Pgm/Mon with 600V isolation) - built-in	-	
IEEE (488.2 & SCPI compliant with Multi-Drop capability installed)	IEEE	Available
Modbus-TCP	MDBS	coming soon
EtherCAT	ECAT	coming soon

Models 1.7kW

Model	Output Voltage VDC	Output Current (A)	Output Power (W)
G10-170	0~10V	0~170	1700
G20-85	0~20V	0~85	1700
G30-56	0~30V	0~56	1680
G40-42	0~40V	0~42	1680
G60-28	0~60V	0~28	1680

Model	Output Voltage VDC	Output Current (A)	Output Power (W)
G80-21	0~80V	0~21	1680
G100-17	0~100V	0~17	1700
G150-11.2	0~150V	0~11.2	1680
G300-5.6	0~300V	0~5.6	1680
G600-2.8	0~600V	0~2.8	1680

Accessories

Accessories will be sent separatly from the Power Supply packing, according to order.

1. Serial Communication cable

RS-232/RS-485 cable is used to connect the power supply to the Host PC.

Mode	RS-485	RS-232
PC Connector Communication Cable Power Supply Connector	DB-9F Shielded L=2m RJ-45	DB-9F Shielded L=2m RJ-45
P/N	GEN/485-9	GEN/232-9

2. Serial link cable (Included with the power supply)

Daisy-chain up to 31 GENESYS™ power supplies.

Mode	Power Supply Connector	Communication Cable	P/N
RS-485	RJ-45	Shielded L=50cm	GEN/RJ45

3. Bus Paralleling cable

Connectors	Cables	P/N
2013595-1 (TYCO)	Shielded L=11cm	G/P

4. User Manual

Printed User Manual	G/M

How to order G5kW - Power Supply Identification / Accessories

G	10	- 500	-	-	-
Series Name	Output Voltage (0~10V)	Output Current (0~500A)	Interface Options	AC Input Options	Accessories Options
Front Panel Type				3P208 (Three Phase 170~265VAC)	M - Printed *User Manual
Empty: standard				3P400 (Three Phase 342~460VAC)	* User Manual & GUI are provided on CD as Standard
B: Blank Front Panel				3P480 (Three Phase 342~528VAC)	P - Bus Parralleling Cable

Interface Options (Factory installed)	P/N	
LAN (LXI 1.5 compliant with Multi-Drop capability)- built-in	-	
USB 2.0 compliant with Multi-Drop capability - built-in	-	
RS-232/RS-485 - built-in	-	
Isolated Analog Program/Monitor Interface (5V/10V Pgm/Mon with 600V isolation) - built-in	-	
IEEE (488.2 & SCPI compliant with Multi-Drop capability installed)	IEEE	Available
Modbus-TCP	MDBS	coming soon
EtherCAT	ECAT	coming soon

Models 5kW

Model	Output Voltage VDC	Output Current (A)	Output Power (W)
G10-500	0~10V	0~500	5000
G20-250	0~20V	0~250	5000
G30-170	0~30V	0~170	5100
G40-125	0~40V	0~125	5000
G60-85	0~60V	0~85	5100

Model	Output Voltage VDC	Output Current (A)	Output Power (W)
G80-65	0~80V	0~65	5200
G100-50	0~100V	0~50	5000
G150-34	0~150V	0~34	5100
G300-17	0~300V	0~17	5100
G600-8.5	0~600V	0~8.5	5100

Accessories

Accessories will be sent separatly from the Power Supply packing, according to order.

1. Serial Communication cable

RS-232/RS-485 cable is used to connect the power supply to the Host PC.

Mode	RS-485	RS-232
PC Connector Communication Cable Power Supply Connector	DB-9F Shielded L=2m RJ-45	DB-9F Shielded L=2m RJ-45
P/N	GEN/485-9	GEN/232-9

2. Serial link cable (Included with the power supply)

Daisy-chain up to 31 GENESYS™ power supplies.

Mode	Power Supply Connector	Communication Cable	P/N
RS-485	RJ-45	Shielded L=50cm	GEN/RJ45

3. Bus Paralleling cable

Connectors	Cables	P/N
2013595-1 (TYCO)	Shielded L=11cm	G/P

4. User Manual

Printed User Manual	G/M

5. Parallel Kit: 20kW

G/P-4U: BusBar Parallel Kit for 20 kW operation (5kW Models where Vout up to 100V)

How to order GSP10kW-15kW - Power Supply Identification / Accessories

G	SP	10	- 1500	-	-	-
Series Name		Output Voltage (0~10V)	Output Current (0~1500A)	Interface Options	AC Input Options	Accessories Options
Front Panel Type					3P208 (Three Phase 170~265VAC)	M - Printed *User Manual
Empty: standard					3P400 (Three Phase 342~460VAC)	* User Manual & GUI are provided on CD as Standard
B: Blank Front Panel					3P480 (Three Phase 342~528VAC)	

Interface Options (Factory installed)	P/N	
LAN (LXI 1.5 compliant with Multi-Drop capability)- built-in	-	
USB 2.0 compliant with Multi-Drop capability - built-in	-	
RS-232/RS-485 - built-in	-	
Isolated Analog Program/Monitor Interface (5V/10V Pgm/Mon with 600V isolation) - built-in	-	
IEEE (488.2 & SCPI compliant with Multi-Drop capability installed)	IEEE	Available
Modbus-TCP	MDBS	coming soon
EtherCAT	ECAT	coming soon

Models GSP 10kW

Model	Output Voltage VDC	Output Current (A)	Output Power (kW)	Model	Output Voltage VDC	Output Current (A)	Output Power (kW)
GSP10-1000	0~10V	0~1000	10	GSP80-130	0~80V	0~130	10.4
GSP20-500	0~20V	0~500	10	GSP100-100	0~100V	0~100	10
GSP30-340	0~30V	0~340	10.2	GSP150-68	0~150V	0~68	10.2
GSP40-250	0~40V	0~250	10	GSP300-34	0~300V	0~34	10.2
GSP60-170	0~60V	0~170	10.2	GSP600-17	0~600V	0~17	10.2

Models GSP 15kW

Model	Output Voltage VDC	Output Current (A)	Output Power (kW)	Model	Output Voltage VDC	Output Current (A)	Output Power (kW)
GSP10-1500	0~10V	0~1500	15	GSP80-195	0~80V	0~195	15.6
GSP20-750	0~20V	0~750	15	GSP100-150	0~100V	0~150	15
GSP30-510	0~30V	0~510	15.3	GSP150-102	0~150V	0~102	15.3
GSP40-375	0~40V	0~375	15	GSP300-51	0~300V	0~51	15.3
GSP60-255	0~60V	0~255	15.3	GSP600-25.5	0~600V	0~25.5	15.3

Accessories

Accessories will be sent separatly from the Power Supply packing, according to order.

1. Serial Communication cable

RS-232/RS-485 cable is used to connect the power supply to the Host PC.

Mode	RS-485	RS-232
PC Connector Communication Cable Power Supply Connector	DB-9F Shielded L=2m RJ-45	DB-9F Shielded L=2m RJ-45
P/N	GEN/485-9	GEN/232-9

2. Bus Paralleling cable (Included with the power supply)

Connectors	Cables	P/N
2013595-1 (TYCO)	Shielded L=11cm	G/P

3. User Manual

Printed User Manual	GSP/M

GENESYS™ Family Output Voltage and Current

Models Series	G (Std Front Panel Display) GB (Blank Front Panel Display)		GSP (Scalable Power)	
Rated Power	1.7kW	5kW	10kW	15kW
Voltage Range	Current Range (A)			
0-10V	0~170A	0~500A	0~1000A	0~1500A
0-20V	0~85A	0~250A	0~500A	0~750A
0-30V	0~56A	0~170A	0~340A	0~510A
0-40V	0~42A	0~125A	0~250A	0~375A
0-60V	0~28A	0~85A	0~170A	0~255A
0-80V	0~21A	0~65A	0~130A	0~195A
0-100V	0~17A	0~50A	0~100A	0~150A
0-150V	0~11.2A	0~34A	0~68A	0~102A
0-300V	0~5.6A	0~17A	0~34A	0~51A
0-600V	0~2.8A	0~8.5A	0~17A	0~25.5A
Weight (Kg/lb)	5/11	7.5/16.5	15.5/34.2	23.5/51.8

AC Input Range

Rated Power	1.7kW	5kW	10kW	15kW
1Ø, 85-265Vac	*	N/A	N/A	N/A
3P208	N/A	*	*	*
3P400	N/A	*	*	*
3P480	N/A	*	*	*

GENESYS™ 1700W SERIES SPECIFICATIONS

OUTPUT RATING	G	10-170	20-85	30-56	40-42	60-28	80-21	100-17	150-11.2	300-5.6	600-2.8
1.Rated output voltage(*1)	V	10	20	30	40	60	80	100	150	300	600
2.Rated output current (*2)	A	170	85	56	42	28	21	17	11.2	5.6	2.8
3.Rated output power	W	1700	1700	1680	1680	1680	1680	1700	1680	1680	1680

INPUT CHARACTERISTICS	V	10	20	30	40	60	80	100	150	300	600
1.Input voltage/freq. (*3)	---	85~265Vac, continuous, 47~63Hz,Single Phase									
2. Maximum Input current at 100% load (100/200)	A	20/10									
3.Power Factor (Typ)	---	0.99 @ 100Vac 0.98 @ 200Vac, rated output power.									
4.Efficiency (at 100 Vac/20Vac, rated output)	%	86/88	87/89	87/89	87/89	87/89	87/89	88/90	88/90	88/90	88/90
5.Inrush current (*5)	A	Less than 50A									

CONSTANT VOLTAGE MODE	V	10	20	30	40	60	80	100	150	300	600
1.Max. Line regulation (*6)	---	0.01% of rated output voltage									
2.Max. Load regulation (*7)	---	0.01% of rated output voltage +2mV									
3.Ripple and noise (p-p, 20MHz) (*8)	mV	50	50	50	60	60	70	70	70	120	300
4.Ripple r.m.s. 5Hz~1MHz (*8)	mV	6	6	6	6	7	7	12	8	20	60
5.Temperature coefficient	PPM/°C	50PPM/°C from rated output voltage, following 30 minutes warm-up.									
6.Temperature stability	---	0.01% of rated Vout over 8hrs interval following 30 minutes warm-up. Constant line, load & temp.									
7. Warm-up drift	---	Less than 0.01% of rated output voltage+2mV over 30 minutes following power on.									
8.Remote sense compensation/wire (*10)	V	1	1	1.5	2	2	3	4	5	5	5
9.Up-prog. Response time (*11)	mS	20	20	20	20	20	20	20	50	100	100
10.Down-prog.response time: Full load (*12)	mS	30	30	60	60	60	60	60	120	220	200
10.Down-prog.response time: No load (*12)	mS	450	700	1000	1200	1500	1700	2600	2900	4600	4600
11.Transient response time	mS	Time for output voltage to recover within 0.5% of its rated output for a load change 10~90% of rated output current. Output set-point: 10~100%, Local sense. Less than 1mS, for models up to and including 100V. 2mS, for models above 100V.									
12.Hold-up time	mS	16ms typical, rated output power									

CONSTANT CURRENT MODE	V	10	20	30	40	60	80	100	150	300	600
1.Max. Line regulation (*6)	---	0.01% of rated output current. +2mA									
2.Max. Load regulation (*9)	---	0.02% of rated output current. +5mA									
3.Ripple r.m.s. @ 10% rated voltage (*13)	mA	400	160	100	60	50	30	30	10	8	3
4.Ripple r.m.s. @ rated voltage. B.W 5Hz~1MHz.	mA	250	120	70	60	50	25	15	10	8	3
5.Temperature coefficient	PPM/°C	10V~100V 100PPM/°C from rated output current, following 30 minutes warm-up.									
		150V~600V 70PPM/°C from rated output current, following 30 minutes warm-up.									
6.Temperature stability	---	0.01% of rated Iout over 8hrs. interval following 30 minutes warm-up. Constant line, load & temperature.									
7. Warm-up drift	---	10V~100V model: Less than +/-0.25% of rated output current over 30 minutes following power on.									
		150V~600V: Less than +/-0.15% of rated output current over 30 minutes following power on.									

ANALOG PROGRAMMING AND MONITORING (ISOLATED FROM THE OUTPUT)		
1.Vout voltage programming	---	0~100%, 0~5V or 0~10V, user selectable. Accuracy and linearity: +/-0.15% of rated Vout.
2.Iout voltage programming (*14)	---	0~100%, 0~5V or 0~10V, user selectable. Accuracy and linearity: +/-0.4% of rated Iout.
3.Vout resistor programming	---	0~100%, 0~5/10Kohm full scale, user selectable. Accuracy and linearity: +/-0.5% of rated Vout.
4.Iout resistor programming (*14)	---	0~100%, 0~5/10Kohm full scale, user selectable. Accuracy and linearity: +/-0.5% of rated Iout.
5.Output voltage monitor	---	0~5V or 0~10V, user selectable. Accuracy: +/-0.5%.
6.Output current monitor (*14)	---	0~5V or 0~10V, user selectable. Accuracy: +/-0.5%.

SIGNALS AND CONTROLS (ISOLATED FROM THE OUTPUT)		
1. Power supply OK #1 signal	---	Power supply output monitor. Open collector. Output On: On. Output Off: Off. Maximum Voltage: 30V, Maximum Sink Current: 10mA.
2. CV/CC signal	---	CV/CC Monitor. Open collector. CC mode: On. CV mode: Off. Maximum Voltage: 30V, Maximum Sink Current: 10mA.
3. LOCAL/REMOTE Analog control	---	Enable/Disable analog programming control by electrical signal or dry contact. Remote: 0~0.6V or short. Local: 2~30V or open.
4. LOCAL/REMOTE Analog signal	---	analog programming control monitor signal. Open collector. Remote: On. Local: Off. Maximum Voltage: 30V, Maximum Sink Current: 10mA.
5. ENABLE/DISABLE signal	---	Enable/Disable PS output by electrical signal or dry contact. 0~0.6V or short, 2~30V or open. User selectable logic.
6. INTERLOCK (ILC) control	---	Enable/Disable PS output by electrical signal or dry contact. Remote: 0~0.6V or short. Local: 2~30V or open.
7. Programmed signals	---	Two open drain programmable signals. Maximum voltage 25V, Maximum sink current 100mA (Shunted by 27V zener)
8. TRIGGER IN / TRIGGER OUT signals	---	Maximum low level input voltage = 0.8V,Minimum high level input voltage = 2.5V, Maximum high level input = 5V positive edge trigger: tw=10us minimum. Tr,Tf=1us Maximum, Min delay between 2 pulses 1ms.
9. DAISY_IN/SO control signal	---	By electrical Voltage: 0~0.6V/2~30V or dry contact.
10. DAISY_OUT/PS_OK #2 signal	---	4~5V=OK, 0V (500ohm impedance)=Fail

FUNCTIONS AND FEATURES		
1. Parallel operation	---	Possible. Up to 4 identical units in Master/Slave mode. Refer to instruction manual.
2. Series operation	---	Possible. Two identical units. Refer to instruction manual.
3. Daisy chain	---	Power supplies can be connected in Daisy chain to synchronize their turn-on and turn-off.
4. Constant power control	---	Limits the output power to a proggrammed value. Programming via the communication ports or the front panel.
5. Output resistance control	---	Emulates series resistance. Resistance range: 1~1000mΩ. Programming via the communication ports or the front panel.
6. Slew rate control	---	Programmable Output rise and Output fall slew rate. Programming range: 0.0001~999.9 V/mSec. or A/mSec. Programming via the communication ports or the front panel.
7. Arbitrary waveforms	---	Profiles of up to 100 steps can be stored in 4 memory cells. Activation by command via the communication ports or by the front panel.

PROGRAMMING AND READBACK (USB, LAN, RS232/485, Optional IEEE (*18) Interface)	V	10	20	30	40	60	80	100	150	300	600
1.Vout programming accuracy (*15)	---	0.05% of rated output voltage									
2.Iout programming accuracy (*14)	---	0.1% of actual output current+0.2% of rated output current									
3.Vout programming resolution	---	0.002% of rated output voltage									
4.Iout programming resolution	---	0.002% of rated output current									
5.Vout readback accuracy	---	0.05% of rated output voltage									
6.Iout readback accuracy (*14)	---	0.2% of rated output current									
7.Vout readback resolution (of rated output voltage)	%	0.011%	0.006%	0.004%	0.003%	0.002%	0.002%	0.011%	0.007%	0.004%	0.002%
8.Iout readback resolution (of rated output current))	%	0.007%	0.002%	0.003%	0.003%	0.005%	0.006%	0.007%	0.010%	0.003%	0.004`%

GENESYS™ 1700W SERIES SPECIFICATIONS

PROTECTIVE FUNCTIONS	V	10	20	30	40	60	80	100	150	300	600
1.Foldback protection	---	Output shut-down when power supply changes mode from CV or Power Limit to CC mode or from CC or Power Limit to CV mode. User presetable. Reset by AC input recycle in autostart mode, by Power Switch, by OUTPUT button, by rear panel or by communication.									
2.Over-voltage protection (OVP)	---	Output shut-down. Reset by AC input recycle in autostart mode, by OUTPUT button, by rear panel or by communication.									
3.Over -voltage programming range	V	0.5~12	1~24	2~36	2~44.1	5~66.15	5~88.2	5~110.25	5~165.37	5~330.75	5~661.5
4. Over-voltage programming accuracy	---	+/-1% of rated output voltage									
5.Output under voltage limit (UVL)	---	Prevents from adjusting Vout below limit. Does not apply in analog programming. Preset by front panel or communication port.									
6.Over temperature protection	---	Shuts down the output. Auto recovery by autostart mode.									
7. Output under voltage limit (UVL)	---	Prevents adjustment of Vout below limit.									
8. Output under voltage protection (UVP)	---	Prevents adjustment of Vout below limit. P.S output turns Off during under voltage condition. Reset by AC input recycle in autostart mode, by Power Switch, by OUTPUT button, by rear panel or by communication.									

FRONT PANEL		
1.Control functions	---	Multiple options with 2 Encoders
	---	Vout/Iout/Power Limit manual adjust
	---	OVP/UVL/UVP manual adjust
	---	Protection Functions - OVP, UVL,UVP, Foldback, OCL, ENA, ILC
	---	Communication Functions - Selection of LAN,IEEE,RS232,RS485,USB or Optional communication interface.
	---	Output ON/OFF. Front Panel Lock.
	---	Communication Functions - Selection of Baud Rate, Address, IP and communication language.
	---	Analog Control Functions - Selection Voltage/resistive programming, 5V/10V, 5K/10K programming
	---	Analog Monitor Functions - Selection of Voltage/Current Monitoring 5V/10V.
2.Display	---	Vout: 4 digits, accuracy: 0.05% of rated output voltage +/-1 count.
	---	Iout: 4 digits, accuracy: 0.2% of rated output current +/-1 count.
3.Front Panel Buttons Indications	---	OUTPUT ON, ALARM, PREVIEW, FINE, COMMUNICATION, PROTECTION,CONFIGURATION, SYSTEM, SEQUENCER.
4. Front Panel Display Indications	---	Voltage, Current, Power, CV, CC, CP, External Voltage, External Current, Address, LFP, Autostart, Safetstart, Foldback V/I, Remote (communication), RS/USB/LAN/IEEE communication, Trigger, Load/Store Cell.

ENVIRONMENTAL CONDITIONS		
1.Operating temperature	---	0~50°C, 100% load.
2.Storage temperature	---	-30~85°C
3.Operating humidity	%	20~90% RH (no condensation).
4.Storage humidity	%	10~95% RH (no condensation).
5.Altitude (*16)	---	Operating: 10000ft (3000m), output current derating 2%/100m or Ta derating 1°C/100m above 2000m. Non operating: 40000ft (12000m).

MECHANICAL		
1.Cooling	---	Forced air cooling by internal fans. Air flow direction: from Front panel to power supply rear
2.Weight	Kg	Less than 5Kg.
3.Dimensions (WxHxD)	mm	W: 423, H: 43.6, D: 441.5 (Without busbars and busbars cover), W: 423, H: 43.6, D: 553.5 (Including busbars and busbars cover) (Refer to Outline drawing).
4.Vibration	---	MIL-810G, method 514.6, Procedure I, test condition Annex C - 2.1.3.1
5.Shock	---	Less than 20G, half sine, 11mSec. Unit is unpacked.

SAFETY/EMC			
1.Applicable standards:	Safety	---	UL60950-1, CSA22.2 No.60950-1, IEC60950-1, EN60950-1.
1.1. Interface classification		---	Vout ≤40V Models: Output, J1,J2,J3,J4,J5,J6,J7,J8 (sense) and ,J9 (communication options) are SELV. 60≤ Vout≤ 600V Models: Output, J8 (sense) are hazardous, J1,J2,J3,J4,J5,J6,J7 and J9 (communication options) are SELV
1.2 Withstand voltage		---	Vout ≤40V Models: Input - Output (SELV): 4242VDC 1min, Input - Ground: 2835VDC 1min. 60V≤Vout≤100V Models: Input - Output: 4242VDC 1min, Input - SELV: 4242VDC 1min, Output - SELV: 850VDC 1min, Output - Ground: 1500VDC 1min, Input - Ground: 2835VDC 1min. 100<Vout≤600V Models: Input - Output: 4242VDC 1min, Input - SELV: 4242VDC 1min, Output - SELV: 1275VDC 1min, Output - Ground: 2500VDC 1min, Input - Ground: 2835VDC 1min.
1.3 Insulation resistance		---	100Mohm at 25ºC, 70%RH.
2.Conducted emmision		---	IEC/EN61204-3 Industrial environment, Annex H table H.1 , FCC Part 15-A, VCCI-A .
3.Radiated emission		---	IEC/EN61204-3 Industrial environment, Annex H table H.3 and H4, FCC Part 15-A, VCCI-A
4. EMC compliance	EMC(*17)	---	According to IEC/EN61204-3 Industrial environment

NOTES:
*1: Minimum voltage is guaranteed to maximum 0.1% of rated output voltage.
*2: Minimum current is guaranteed to maximum 0.2% of rated output current.
*3: For cases where conformance to various safety standards (UL, IEC, etc…) is required, to be described as 100-240Vac (50/60Hz).
*4: Signal and control ports interface cables length: Less than 3m, DC output power port cables length: Less than 30m.
*5: Not including EMI filter inrush current, less than 0.2mSec.
*6: 85~132Vac or 170~265Vac. Constant load.
*7: From No-Load to Full-Load, constant input voltage. Measured at the sensing point in Remote Sense.
*8: For 10V~300V models: Measured with JEITA RC-9131C (1:1) probe. For 400~600V model: Measured with 100:1 probe.
*9: For load voltage change, equal to the unit voltage rating, constant input voltage.
*10: The maximum voltage on the power supply terminals must not exceed the rated voltage.
*11: From 10% to 90% of Rated Output Voltage, with rated, resistive load.
*12: From 90% to 10% of Rated Output Voltage.
*13: For 10V model the ripple is measured at 2V and rated output current. For other models, the ripple is measured at 10% of rated output voltage.
*14: The Constant Current programming, readback and monitoring accuracy do not include the warm-up and Load regulation thermal drift.
*15: Measured at the sensing point.
*16: For 10V model Ta derating 2°C/100m.
*17 Signal and control ports interface cables length: Less than 3m, DC output power port cables length: Less than 30m.
*18 Max. ambient temperature for using IEEE is 40°C.

GENESYS™ 5000W SERIES SPECIFICATIONS

OUTPUT RATING	G	10-500	20-250	30-170	40-125	60-85	80-65	100-50	150-34	300-17	600-8.5
1.Rated output voltage(*1)	V	10	20	30	40	60	80	100	150	300	600
2.Rated output current (*2)	A	500 (*3)	250	170	125	85	65	50	34	17	8.5
3.Rated output power	W	5000	5000	5100	5000	5100	5200	5000	5100	5100	5100

INPUT CHARACTERISTICS		V	10	20	30	40	60	80	100	150	300	600
1.Input voltage/freq. 3 phase, 3 wire + Ground (*4)		---	3-Phase, 200V models: 170~265Vac, 47~63Hz (Covers 200/230Vac)									
			3-Phase, 400V models: 342~460Vac, 47~63Hz (Covers 380/400/415Vac)									
			3-Phase, 480V models: 342~528Vac, 47~63Hz (Covers 380/400/415/440/460/480Vac)									
2. Maximum Input current at 100% load	3-Phase, 200V models:	---	17.5A @ 200Vac									
	3-Phase, 400V models:		9.2A @ 380Vac									
	3-Phase, 480V models:		9.2A @ 380Vac									
3.Power Factor (Typ)		---	0.94 @ 200/380Vac, rated output power.									
4.Efficiency (*5)		%	89.5	91	91	91	91	91	91	91	92	92
5.Inrush current (*6)		A	Less than 50A									

CONSTANT VOLTAGE MODE		V	10	20	30	40	60	80	100	150	300	600
1.Max. Line regulation (*7)		---	0.01% of rated output voltage									
2.Max. Load regulation (*8)		---	0.01% of rated output voltage +5mV									
3.Ripple and noise (p-p, 20MHz) (*9)		mV	75	75	75	75	75	80	90	120	200	480
4.Ripple r.m.s. 5Hz~1MHz (*9)		mV	8	10	12	12	12	15	15	20	60	100
5.Temperature coefficient		PPM/°C	50PPM/°C from rated output voltage, following 30 minutes warm-up.									
6.Temperature stability		---	0.01% of rated Vout over 8hrs interval following 30 minutes warm-up. Constant line, load & temp.									
7. Warm-up drift		---	Less than 0.05% of rated output voltage+2mV over 30 minutes following power on.									
8.Remote sense compensation/wire (*10)		V	2	2	5	5	5	5	5	5	5	5
9.Up-prog. Response time (*11)		mS	30	30	30	30	50	50	50	50	50	100
10.Down-prog.response time:	Full load (*11)	mS	50	50	80	80	80	100	100	100	100	200
	No load (*12)	mS	300	600	800	900	1000	1200	1900	2000	3000	3000
11.Transient response time		mS	Time for output voltage to recover within 0.5% of its rated output for a load change 10~90% of rated output current. Output set-point: 10~100%, Local sense. Less than 1mS, for models up to and including 100V. 2mS, for models above 100V.									
12.Start up delay		mS	< 5mS									

CONSTANT CURRENT MODE	V	10	20	30	40	60	80	100	150	300	600
1.Max. Line regulation (*7)	---	0.05% of rated output current.									
2.Max. Load regulation (*13)	---	0.08% of rated output current.									
3.Ripple r.m.s. @ 10% rated voltage (*14)	mA	1200	600	300	150	100	70	45	45	15	8
4.Ripple r.m.s. @ rated voltage. B.W 5Hz~1MHz.	mA	700	300	150	75	50	35	23	23	7.5	4
5.Temperature coefficient	PPM/°C	10V~100V 100PPM/°C from rated output current, following 30 minutes warm-up.									
		150V~600V 70PPM/°C from rated output current, following 30 minutes warm-up.									
6.Temperature stability	---	0.01% of rated Iout over 8hrs. interval following 30 minutes warm-up. Constant line, load & temperature.									
7. Warm-up drift	---	10V~100V model: Less than +/-0.25% of rated output current over 30 minutes following power on.									
		150V~600V: Less than +/-0.15% of rated output current over 30 minutes following power on.									

ANALOG PROGRAMMING AND MONITORING (ISOLATED FROM THE OUTPUT)		
1.Vout voltage programming	---	0~100%, 0~5V or 0~10V, user selectable. Accuracy and linearity: +/-0.15% of rated Vout.
2.Iout voltage programming (*15)	---	0~100%, 0~5V or 0~10V, user selectable. Accuracy and linearity: +/-0.4% of rated Iout.
3.Vout resistor programming	---	0~100%, 0~5/10Kohm full scale, user selectable. Accuracy and linearity: +/-0.5% of rated Vout.
4.Iout resistor programming (*15)	---	0~100%, 0~5/10Kohm full scale, user selectable. Accuracy and linearity: +/-0.5% of rated Iout.
5.Output voltage monitor	---	0~5V or 0~10V, user selectable. Accuracy: +/-0.5%.
6.Output current monitor (*15)	---	0~5V or 0~10V, user selectable. Accuracy: +/-0.5%.

SIGNALS AND CONTROLS (ISOLATED FROM THE OUTPUT)		
1. Power supply OK #1 signal	---	Power supply output monitor. Open collector. Output On: On. Output Off: Off. Maximum Voltage: 30V, Maximum Sink Current: 10mA.
2. CV/CC signal	---	CV/CC Monitor. Open collector. CC mode: On. CV mode: Off. Maximum Voltage: 30V, Maximum Sink Current: 10mA.
3. LOCAL/REMOTE Analog control	---	Enable/Disable analog programming control by electrical signal or dry contact. Remote: 0~0.6V or short. Local: 2~30V or open.
4. LOCAL/REMOTE Analog signal	---	analog programming control monitor signal. Open collector. Remote: On. Local: Off. Maximum Voltage: 30V, Maximum Sink Current: 10mA.
5. ENABLE/DISABLE signal	---	Enable/Disable PS output by electrical signal or dry contact. 0~0.6V or short, 2~30V or open. User selectable logic.
6. INTERLOCK (ILC) control	---	Enable/Disable PS output by electrical signal or dry contact. Remote: 0~0.6V or short. Local: 2~30V or open.
7. Programmed signals	---	Two open drain programmable signals. Maximum voltage 25V, Maximum sink current 100mA (Shunted by 27V zener)
8. TRIGGER IN / TRIGGER OUT signals	---	Maximum low level input voltage = 0.8V,Minimum high level input voltage = 2.5V, Maximum high level input = 5V positive edge trigger: tw=10us minimum. Tr,Tf=1us Maximum, Min delay between 2 pulses 1ms.
9. DAISY_IN/SO control signal	---	By electrical Voltage: 0~0.6V/2~30V or dry contact.
10. DAISY_OUT/PS_OK #2 signal	---	4~5V=OK, 0V (500ohm impedance)=Fail

FUNCTIONS AND FEATURES		
1. Parallel operation	---	Possible. Up to 4 identical units in Master/Slave mode. Refer to instruction manual.
2. Series operation	---	Possible. Two identical units. Refer to instruction manual.
3. Daisy chain	---	Power supplies can be connected in Daisy chain to synchronize their turn-on and turn-off.
4. Constant power control	---	Limits the output power to a proggrammed value. Programming via the communication ports or the front panel.
5. Output resistance control	---	Emulates series resistance. Resistance range: 1~1000mΩ. Programming via the communication ports or the front panel.
6. Slew rate control	---	Programmable Output rise and Output fall slew rate. Programming range: 0.0001~999.9 V/mSec. or A/mSec. Programming via the communication ports or the front panel.
7. Arbitrary waveforms	---	Profiles of up to 100 steps can be stored in 4 memory cells. Activation by command via the communication ports or by the front panel.

PROGRAMMING AND READBACK (USB, LAN, RS232/485, Optional IEEE(*19)(*20) Interface)	V	10	20	30	40	60	80	100	150	300	600
1.Vout programming accuracy (*16)	---	0.05% of rated output voltage									
2.Iout programming accuracy (*15)	---	0.1% of actual output current+0.2% of rated output current									
3.Vout programming resolution	---	0.002% of rated output voltage									
4.Iout programming resolution	---	0.002% of rated output current									
5.Vout readback accuracy	---	0.05% of rated output voltage									
6.Iout readback accuracy (*15)	---	0.2% of rated output current									
7.Vout readback resolution (of rated output voltage)	%	0.011%	0.006%	0.004%	0.003%	0.002%	0.002%	0.011%	0.007%	0.004%	0.002%
8.Iout readback resolution (of rated output current))	%	0.003%	0.005%	0.006%	0.009%	0.002%	0.002%	0.003%	0.004%	0.006%	0.002%

GENESYS™ 5000W SERIES SPECIFICATIONS

PROTECTIVE FUNCTIONS	V	10	20	30	40	60	80	100	150	300	600
1.Foldback protection	---	Output shut-down when power supply changes mode from CV or Power Limit to CC mode or from CC or Power Limit to CV mode. User presetable. Reset by AC input recycle in autostart mode, by Power Switch, by OUTPUT button, by rear panel or by communication.									
2.Over-voltage protection (OVP)	---	Output shut-down. Reset by AC input recycle in autostart mode, by OUTPUT button, by rear panel or by communication.									
3.Over -voltage programming range	V	0.5~12	1~24	2~36	2~44.1	5~66.15	5~88.2	5~110.25	5~165.37	5~330.75	5~661.5
4. Over-voltage programming accuracy	---	+/-1% of rated output voltage									
5.Output under voltage limit (UVL)	---	Prevents from adjusting Vout below limit. Does not apply in analog programming. Preset by front panel or communication port.									
6.Over temperature protection	---	Shuts down the output. Auto recovery by autostart mode.									
7. Output under voltage limit (UVL)	---	Prevents adjustment of Vout below limit.									
8. Output under voltage protection (UVP)	---	Prevents adjustment of Vout below limit. P.S output turns Off during under voltage condition. Reset by AC input recycle in autostart mode, by Power Switch, by OUTPUT button, by rear panel or by communication.									

FRONT PANEL		
1.Control functions	---	Multiple options with 2 Encoders
	---	Vout/Iout/Power Limit manual adjust
	---	OVP/UVL/UVP manual adjust
	---	Protection Functions - OVP, UVL,UVP, Foldback, OCL, ENA, ILC
	---	Communication Functions - Selection of LAN,IEEE,RS232,RS485,USB or Optional communication interface.
	---	Output ON/OFF. Front Panel Lock.
	---	Communication Functions - Selection of Baud Rate, Address, IP and communication language.
	---	Analog Control Functions - Selection Voltage/resistive programming, 5V/10V, 5K/10K programming
	---	Analog Monitor Functions - Selection of Voltage/Current Monitoring 5V/10V.
2.Display	---	Vout: 4 digits, accuracy: 0.05% of rated output voltage +/-1 count.
	---	Iout: 4 digits, accuracy: 0.2% of rated output current +/-1 count.
3.Front Panel Buttons Indications	---	OUTPUT ON, ALARM, PREVIEW, FINE, COMMUNICATION, PROTECTION,CONFIGURATION, SYSTEM, SEQUENCER.
4. Front Panel Display Indications	---	Voltage, Current, Power, CV, CC, CP, External Voltage, External Current, Address, LFP, Autostart, Safetstart, Foldback V/I, Remote (communication), RS/USB/LAN/IEEE communication, Trigger, Load/Store Cell.

ENVIRONMENTAL CONDITIONS		
1.Operating temperature	---	0~50°C, 100% load.
2.Storage temperature	---	-30~85°C
3.Operating humidity	%	20~90% RH (no condensation).
4.Storage humidity	%	10~95% RH (no condensation).
5.Altitude (*17)	---	Operating: 10000ft (3000m), output current derating 2%/100m or Ta derating 1°C/100m above 2000m. Non operating: 40000ft (12000m).

MECHANICAL		
1.Cooling	---	Forced air cooling by internal fans. Air flow direction: from Front panel to power supply rear
2.Weight	Kg	Less than 7.5Kg.
3.Dimensions (WxHxD)	mm	W: 423, H: 43.6, D: 441.5 (Without busbars and busbars cover), W: 423, H: 43.6, D: 553.5 (Including busbars and busbars cover) (Refer to Outline drawing).
4.Vibration	---	MIL-810G, method 514.6, Procedure I, test condition Annex C - 2.1.3.1
5.Shock	---	Less than 20G, half sine, 11mSec. Unit is unpacked.

SAFETY/EMC			
1.Applicable standards:	Safety	---	UL60950-1, CSA22.2 No.60950-1, IEC60950-1, EN60950-1.
1.1. Interface classification		---	Vout ≤40V Models: Output, J1,J2,J3,J4,J5,J6,J7,J8 (sense) and ,J9 (communication options) are SELV. 60≤ Vout≤ 600V Models: Output, J8 (sense) are hazardous, J1,J2,J3,J4,J5,J6,J7 and J9 (communication options) are SELV
1.2 Withstand voltage		---	Vout ≤40V Models: Input - Output (SELV): 4242VDC 1min, Input - Ground: 2835VDC 1min. 60V≤Vout≤100V Models: Input - Output: 4242VDC 1min, Input - SELV: 4242VDC 1min, Output - SELV: 850VDC 1min, Output - Ground: 1500VDC 1min, Input - Ground: 2835VDC 1min. 100<Vout≤600V Models: Input - Output: 4242VDC 1min, Input - SELV: 4242VDC 1min, Output - SELV: 1275VDC 1min, Output - Ground: 2500VDC 1min, Input - Ground: 2835VDC 1min.
1.3 Insulation resistance		---	100Mohm at 25ºC, 70%RH.
2.Conducted emmision		---	IEC/EN61204-3 Industrial environment, Annex H table H.1 , FCC Part 15-A, VCCI-A .
3.Radiated emission		---	IEC/EN61204-3 Industrial environment, Annex H table H.3 and H4, FCC Part 15-A, VCCI-A
4. EMC compliance	EMC(*18)	---	According to IEC/EN61204-3 Industrial environment

NOTES:
*1: Minimum voltage is guaranteed to maximum 0.1% of rated output voltage.
*2: Minimum current is guaranteed to maximum 0.2% of rated output current.
*3: Derate 5A/1°C above 40°C.
*4: For cases where conformance to various safety standards (UL, IEC, etc…) is required, to be described as 190-240Vac (50/60Hz) for 3-Phase
*5: 3-Phase 200V models: At 200Vac input voltage, 3-Phase 400/480V: At 380Vac input voltage. With rated output power.
*6: Not including EMI filter inrush current, less than 0.2mSec.
*7: 3-Phase 200V models: 170~265Vac, 3-Phase 400V models: 342~460Vac, 3-Phase 480V models: 342~528Vac. Constant load.
*8: From No-Load to Full-Load, constant input voltage. Measured at the sensing point in Remote Sense.
*9: For 10V~150V models: Measured with JEITA RC-9131C (1:1) probe. For 300~600V model: Measured with 100:1 probe.
*10: The maximum voltage on the power supply terminals must not exceed the rated voltage.
*11: From 10% to 90% or 90% to 10% of Rated Output Voltage, with rated, resistive load.
*12: From 90% to 10% of Rated Output Voltage.
*13: For load voltage change, equal to the unit voltage rating, constant input voltage.
*14: For 10V model the ripple is measured at 2V and rated output current. For other models, the ripple is measured at 10% of rated output voltage. B.W 5Hz~1MHz.
*15: The Constant Current programming, readback and monitoring accuracy do not include the warm-up and Load regulation thermal drift.
*16: Measured at the sensing point.
*17: For 10V model Ta derating 2°C/100m.
* 18 Signal and control ports interface cables length: Less than 3m, DC output power port cables length: Less than 30m.
* 19 Max. ambient temperature for using IEEE is 40°C.
* 20 For 10V model only: Max. output current for using IEEE is 400A up to 40°C and 450A up to 30°C.

GENESYS™ GSP10kW SERIES SPECIFICATIONS

OUTPUT RATING	GSP	10-1000	20-500	30-340	40-250	60-170	80-130	100-100	150-68	300-34	600-17
1.Rated output voltage(*1)	V	10	20	30	40	60	80	100	150	300	600
2.Rated output current (*2)	A	1000 (*3)	500	340	250	170	130	100	68	34	17
3.Rated output power	kW	10	10	10.2	10	10.2	10.4	10	10.2	10.2	10.2

INPUT CHARACTERISTICS	V	10	20	30	40	60	80	100	150	300	600
1.Input voltage/freq. 3 phase, 3 wire + Ground (*4)	---	3-Phase, 200V models: 170~265Vac, 47~63Hz (Covers 200/230Vac)									
		3-Phase, 400V models: 342~460Vac, 47~63Hz (Covers 380/400/415Vac)									
		3-Phase, 480V models: 342~528Vac, 47~63Hz (Covers 380/400/415/440/460/480Vac)									
2. Maximum Input current at 100% load — 3-Phase, 200V models:	---	35A @ 200Vac									
3-Phase, 400V models:	---	18.4A @ 380Vac									
3-Phase, 480V models:	---	18.4A @ 380Vac									
3.Power Factor (Typ)	---	0.94 @ 200/380Vac, rated output power.									
4.Efficiency (*5)	%	89.5	90	91	91	91	91	91	91	92	92
5.Inrush current (*6)	A	Less than 100A									
6.AC line phase imbalance	%	< 5%									

CONSTANT VOLTAGE MODE	V	10	20	30	40	60	80	100	150	300	600
1.Max. Line regulation (*7)	---	0.01% of rated output voltage									
2.Max. Load regulation (*8)	---	0.01% of rated output voltage +5mV									
3.Ripple and noise (p-p, 20MHz) (*9)	mV	75	75	75	75	75	80	90	120	200	480
4.Ripple r.m.s. 5Hz~1MHz (*9)	mV	8	10	12	12	12	15	15	20	60	100
5.Temperature coefficient	PPM/°C	50PPM/°C from rated output voltage, following 30 minutes warm-up.									
6.Temperature stability	---	0.01% of rated Vout over 8hrs interval following 30 minutes warm-up. Constant line, load & temp.									
7. Warm-up drift	---	Less than 0.05% of rated output voltage+2mV over 30 minutes following power on.									
8.Remote sense compensation/wire (*10)	V	2	2	5	5	5	5	5	5	5	5
9.Up-prog. Response time (*11)	mS	30	30	30	30	50	50	50	50	50	100
10.Down-prog.response time: Full load (*11)	mS	50	50	80	80	80	100	100	100	100	200
No load (*12)	mS	300	600	800	900	1000	1200	1900	2000	3000	3000
11.Transient response time	mS	Time for output voltage to recover within 0.5% of its rated output for a load change 10~90% of rated output current. Output set-point: 10~100%, Local sense. Less than 1mS, for models up to and including 100V. 2mS, for models above 100V.									
12.Start up delay	Sec	Less than 7 Sec									

CONSTANT CURRENT MODE											
1.Max. Line regulation (*7)	---	0.05% of rated output current.									
2.Max. Load regulation (*13)	---	0.08% of rated output current.									
3.Ripple r.m.s. @ 10% rated voltage (*14)	mA	1500	1200	600	300	150	100	70	45	15	10
4.Ripple r.m.s. @ rated voltage. B.W 5Hz~1MHz.	mA	1200	700	300	150	75	50	35	23	7.5	6
5.Temperature coefficient	PPM/°C	10V~100V 100PPM/°C from rated output current, following 30 minutes warm-up.									
		150V~600V 70PPM/°C from rated output current, following 30 minutes warm-up.									
6.Temperature stability	---	0.01% of rated Iout over 8hrs. interval following 30 minutes warm-up. Constant line, load & temperature.									
7. Warm-up drift	---	10V~100V model: Less than +/-0.25% of rated output current over 30 minutes following power on.									
		150V~600V: Less than +/-0.15% of rated output current over 30 minutes following power on.									

ANALOG PROGRAMMING AND MONITORING (ISOLATED FROM THE OUTPUT)		
1.Vout voltage programming	---	0~100%, 0~5V or 0~10V, user selectable. Accuracy and linearity: +/-0.15% of rated Vout.
2.Iout voltage programming (*15)	---	0~100%, 0~5V or 0~10V, user selectable. Accuracy and linearity: +/-0.4% of rated Iout.
3.Vout resistor programming	---	0~100%, 0~5/10Kohm full scale, user selectable. Accuracy and linearity: +/-0.5% of rated Vout.
4.Iout resistor programming (*15)	---	0~100%, 0~5/10Kohm full scale, user selectable. Accuracy and linearity: +/-0.5% of rated Iout.
5.Output voltage monitor	---	0~5V or 0~10V, user selectable. Accuracy: +/-0.5%.
6.Output current monitor (*15)	---	0~5V or 0~10V, user selectable. Accuracy: +/-0.5%.

SIGNALS AND CONTROLS (ISOLATED FROM THE OUTPUT)		
1. Power supply OK #1 signal	---	Power supply output monitor. Open collector. Output On: On. Output Off: Off. Maximum Voltage: 30V, Maximum Sink Current: 10mA.
2. CV/CC signal	---	CV/CC Monitor. Open collector. CC mode: On. CV mode: Off. Maximum Voltage: 30V, Maximum Sink Current: 10mA.
3. LOCAL/REMOTE Analog control	---	Enable/Disable analog programming control by electrical signal or dry contact. Remote: 0~0.6V or short. Local: 2~30V or open.
4. LOCAL/REMOTE Analog signal	---	analog programming control monitor signal. Open collector. Remote: On. Local: Off. Maximum Voltage: 30V, Maximum Sink Current: 10mA.
5. ENABLE/DISABLE signal	---	Enable/Disable PS output by electrical signal or dry contact. 0~0.6V or short, 2~30V or open. User selectable logic.
6. INTERLOCK (ILC) control	---	Enable/Disable PS output by electrical signal or dry contact. Remote: 0~0.6V or short. Local: 2~30V or open.
7. Programmed signals	---	Two open drain programmable signals. Maximum voltage 25V, Maximum sink current 100mA (Shunted by 27V zener)
8. TRIGGER IN / TRIGGER OUT signals	---	Maximum low level input voltage = 0.8V,Minimum high level input voltage = 2.5V, Maximum high level input = 5V positive edge trigger: tw=10us minimum. Tr,Tf=1us Maximum, Min delay between 2 pulses 1ms.
9. DAISY_IN/SO control signal	---	By electrical Voltage: 0~0.6V/2~30V or dry contact.
10. DAISY_OUT/PS_OK #2 signal	---	4~5V=OK, 0V (500ohm impedance)=Fail

FUNCTIONS AND FEATURES		
1. Parallel operation	---	Consult with Factory
2. Series operation	---	Consult with Factory
3. Daisy chain	---	Power supplies can be connected in Daisy chain to synchronize their turn-on and turn-off.
4. Constant power control	---	Limits the output power to a proggrammed value. Programming via the communication ports or the front panel.
5. Output resistance control	---	Emulates series resistance. Resistance range: 1~1000mΩ. Programming via the communication ports or the front panel.
6. Slew rate control	---	Programmable Output rise and Output fall slew rate. Programming range: 0.0001~999.9 V/mSec. or A/mSec. Programming via the communication ports or the front panel.
7. Arbitrary waveforms	---	Profiles of up to 100 steps can be stored in 4 memory cells. Activation by command via the communication ports or by the front panel.

PROGRAMMING AND READBACK (USB, LAN, RS232/485, Optional IEEE (*19)(*20) Interface)	V	10	20	30	40	60	80	100	150	300	600
1.Vout programming accuracy (*16)	---	0.05% of rated output voltage									
2.Iout programming accuracy (*15)	---	0.3% of rated output current									
3.Vout programming resolution	---	0.002% of rated output voltage									
4.Iout programming resolution	---	0.002% of rated output current									
5.Vout readback accuracy	---	0.05% of rated output voltage									
6.Iout readback accuracy (*15)	---	0.2% of rated output current									
7.Vout readback resolution (of rated output voltage)	%	0.011%	0.006%	0.004%	0.003%	0.002%	0.002%	0.011%	0.007%	0.004%	0.002%
8.Iout readback resolution (of rated output current))	%	0.003%	0.005%	0.006%	0.009%	0.002%	0.002%	0.003%	0.004%	0.006%	0.002%

GENESYS™ GSP15kW SERIES SPECIFICATIONS

OUTPUT RATING	GSP	10-1500	20-750	30-510	40-375	60-255	80-195	100-150	150-102	300-51	600-25.5
1.Rated output voltage(*1)	V	10	20	30	40	60	80	100	150	300	600
2.Rated output current (*2)	A	1500 (*3)	750	510	375	255	195	150	102	51	25.5
3.Rated output power	kW	15	15	15.3	15	15.3	15.6	15	15.3	15.3	15.3

INPUT CHARACTERISTICS		V	10	20	30	40	60	80	100	150	300	600
1.Input voltage/freq. 3 phase, 3 wire + Ground (*4)		---	3-Phase, 200V models: 170~265Vac, 47~63Hz (Covers 200/230Vac)									
			3-Phase, 400V models: 342~460Vac, 47~63Hz (Covers 380/400/415Vac)									
			3-Phase, 480V models: 342~528Vac, 47~63Hz (Covers 380/400/415/440/460/480Vac)									
2. Maximum Input current at 100% load	3-Phase, 200V models:	---	52.5A @ 200Vac									
	3-Phase, 400V models:		27.6A @ 380Vac									
	3-Phase, 480V models:		27.6A @ 380Vac									
3.Power Factor (Typ)		---	0.94 @ 200/380Vac, rated output power.									
4.Efficiency (*5)		%	89.5	90	91	91	91	91	91	91	92	92
5.Inrush current (*6)		A	Less than 150A									
6.AC line phase imbalance		%	< 5%									

CONSTANT VOLTAGE MODE		V	10	20	30	40	60	80	100	150	300	600
1.Max. Line regulation (*7)		---	0.01% of rated output voltage									
2.Max. Load regulation (*8)		---	0.01% of rated output voltage +5mV									
3.Ripple and noise (p-p, 20MHz) (*9)		mV	75	75	75	75	75	80	90	120	200	480
4.Ripple r.m.s. 5Hz~1MHz (*9)		mV	8	10	12	12	12	15	15	20	60	100
5.Temperature coefficient		PPM/°C	50PPM/°C from rated output voltage, following 30 minutes warm-up.									
6.Temperature stability		---	0.01% of rated Vout over 8hrs interval following 30 minutes warm-up. Constant line, load & temp.									
7. Warm-up drift		---	Less than 0.05% of rated output voltage+2mV over 30 minutes following power on.									
8.Remote sense compensation/wire (*10)		V	2	2	5	5	5	5	5	5	5	5
9.Up-prog. Response time (*11)		mS	30	30	30	30	50	50	50	50	50	100
10.Down-prog.response time:	Full load (*11)	mS	50	50	80	80	80	100	100	100	100	200
	No load (*12)	mS	300	600	800	900	1000	1200	1900	2000	3000	3000
11.Transient response time		mS	Time for output voltage to recover within 0.5% of its rated output for a load change 10~90% of rated output current. Output set-point: 10~100%, Local sense. Less than 1mS, for models up to and including 100V. 2mS, for models above 100V.									
12..Start up delay		Sec	Less than 7 Sec									
13.Hold-up time		---										

CONSTANT CURRENT MODE	V	10	20	30	40	60	80	100	150	300	600
1.Max. Line regulation (*7)	---	0.05% of rated output current.									
2.Max. Load regulation (*13)	---	0.08% of rated output current.									
3.Ripple r.m.s. @ 10% rated voltage (*14)	mA	2000	1200	600	300	180	100	70	45	15	10
4.Ripple r.m.s. @ rated voltage. B.W 5Hz~1MHz.	mA	1200	700	300	150	90	60	35	23	7.5	6
5.Temperature coefficient	PPM/°C	10V~100V 100PPM/°C from rated output current, following 30 minutes warm-up.									
		150V~600V 70PPM/°C from rated output current, following 30 minutes warm-up.									
6.Temperature stability	---	0.01% of rated Iout over 8hrs. interval following 30 minutes warm-up. Constant line, load & temperature.									
7. Warm-up drift	---	10V~100V model: Less than +/-0.25% of rated output current over 30 minutes following power on.									
		150V~600V: Less than +/-0.15% of rated output current over 30 minutes following power on.									

ANALOG PROGRAMMING AND MONITORING (ISOLATED FROM THE OUTPUT)		
1.Vout voltage programming	---	0~100%, 0~5V or 0~10V, user selectable. Accuracy and linearity: +/-0.15% of rated Vout.
2.Iout voltage programming (*15)	---	0~100%, 0~5V or 0~10V, user selectable. Accuracy and linearity: +/-0.4% of rated Iout.
3.Vout resistor programming	---	0~100%, 0~5/10Kohm full scale, user selectable. Accuracy and linearity: +/-0.5% of rated Vout.
4.Iout resistor programming (*15)	---	0~100%, 0~5/10Kohm full scale, user selectable. Accuracy and linearity: +/-0.5% of rated Iout.
5.Output voltage monitor	---	0~5V or 0~10V, user selectable. Accuracy: +/-0.5%.
6.Output current monitor (*15)	---	0~5V or 0~10V, user selectable. Accuracy: +/-0.5%.

SIGNALS AND CONTROLS (ISOLATED FROM THE OUTPUT)		
1. Power supply OK signal	---	Power supply output monitor. Open collector. Output On: On. Output Off: Off. Maximum Voltage: 30V, Maximum Sink Current: 10mA.
2. CV/CC signal	---	CV/CC Monitor. Open collector. CC mode: On. CV mode: Off. Maximum Voltage: 30V, Maximum Sink Current: 10mA.
3. LOCAL/REMOTE Analog control	---	Enable/Disable analog programming control by electrical signal or dry contact. Remote: 0~0.6V or short. Local: 2~30V or open.
4. LOCAL/REMOTE Analog signal	---	analog programming control monitor signal. Open collector. Remote: On. Local: Off. Maximum Voltage: 30V, Maximum Sink Current: 10mA.
5. ENABLE/DISABLE Signal	---	Enable/Disable PS output by electrical signal or dry contact. 0~0.6V or short, 2~30V or open. User selectable logic.
6. INTERLOCK (ILC) control	---	Enable/Disable PS output by electrical signal or dry contact. Remote: 0~0.6V or short. Local: 2~30V or open.
7. Programmed signals	---	Two open drain programmable signals. Maximum voltage 25V, Maximum sink current 100mA (Shunted by 27V zener)
8. TRIGGER IN / TRIGGER OUT signals	---	Maximum low level input voltage = 0.8V,Minimum high level input voltage = 2.5V, Maximum high level input = 5V positive edge trigger: tw=10us minimum. Tr,Tf=1us Maximum, Min delay between 2 pulses 1ms.

FUNCTIONS AND FEATURES		
1. Parallel operation	---	Consult with Factory
2. Series operation	---	Consult with Factory
3. Daisy chain	---	Power supplies can be connected in Daisy chain to synchronize their turn-on and turn-off.
4. Constant power control	---	Limits the output power to a proggrammed value. Programming via the communication ports or the front panel.
5. Output resistance control	---	Emulates series resistance. Resistance range: 1~1000mΩ. Programming via the communication ports or the front panel.
6. Slew rate control	---	Programmable Output rise and Output fall slew rate. Programming range: 0.0001~999.9 V/mSec. or A/mSec. Programming via the communication ports or the front panel.
7. Arbitrary waveforms	---	Profiles of up to 100 steps can be stored in 4 memory cells. Activation by command via the communication ports or by the front panel.

PROGRAMMING AND READBACK (USB, LAN, RS232/485, Optional IEEE (*19)(*20) Interface)	V	10	20	30	40	60	80	100	150	300	600
1.Vout programming accuracy (*16)	---	0.05% of rated output voltage									
2.Iout programming accuracy (*15)	---	0.3% of rated output current									
3.Vout programming resolution	---	0.002% of rated output voltage									
4.Iout programming resolution	---	0.002% of rated output current									
5.Vout readback accuracy	---	0.05% of rated output voltage									
6.Iout readback accuracy (*15)	---	0.2% of rated output current									
7.Vout readback resolution (of rated output voltage)	%	0.011%	0.006%	0.004%	0.003%	0.002%	0.002%	0.011%	0.007%	0.004%	0.002%
8.Iout readback resolution (of rated output current))	%	0.003%	0.005%	0.006%	0.009%	0.002%	0.002%	0.003%	0.004%	0.006%	0.002%

GENESYS™ GSP10kW/15kW SERIES SPECIFICATIONS

PROTECTIVE FUNCTIONS	V	10	20	30	40	60	80	100	150	300	600
1.Foldback protection	---	Output shut-down when power supply changes mode from CV or Power Limit to CC mode or from CC or Power Limit to CV mode. User presetable. Reset by AC input recycle in autostart mode, by Power Switch, by OUTPUT button, by rear panel or by communication.									
2.Over-voltage protection (OVP)	---	Output shut-down. Reset by AC input recycle in autostart mode, by OUTPUT button, by rear panel or by communication.									
3.Over -voltage programming range	V	0.5~12	1~24	2~36	2~44.1	5~66.15	5~88.2	5~110.25	5~165.37	5~330.75	5~661.5
4. Over-voltage programming accuracy	---	+/-1% of rated output voltage									
5.Output under voltage limit (UVL)	---	Prevents from adjusting Vout below limit. Does not apply in analog programming. Preset by front panel or communication port.									
6.Over temperature protection	---	Shuts down the output. Auto recovery by autostart mode.									
7. Output under voltage limit (UVL)	---	Prevents adjustment of Vout below limit.									
8. Output under voltage protection (UVP)	---	Prevents adjustment of Vout below limit. P.S output turns Off during under voltage condition. Reset by AC input recycle in autostart mode, by Power Switch, by OUTPUT button, by rear panel or by communication.									

FRONT PANEL		
1.Control functions	---	Multiple options with 2 Encoders
	---	Vout/Iout/Power Limit manual adjust
	---	OVP/UVL/UVP manual adjust
	---	Protection Functions - OVP, UVL,UVP, Foldback, OCL, ENA, ILC
	---	Communication Functions - Selection of LAN,IEEE,RS232,RS485,USB or Optional communication interface.
	---	Output ON/OFF. Front Panel Lock.
	---	Communication Functions - Selection of Baud Rate, Address, IP and communication language.
	---	Analog Control Functions - Selection Voltage/resistive programming, 5V/10V, 5K/10K programming
	---	Analog Monitor Functions - Selection of Voltage/Current Monitoring 5V/10V.
2.Display	---	Vout: 4 digits, accuracy: 0.05% of rated output voltage +/-1 count.
	---	Iout: 4 digits, accuracy: 0.2% of rated output current +/-1 count.
3.Front Panel Buttons Indications	---	OUTPUT ON, ALARM, PREVIEW, FINE, COMMUNICATION, PROTECTION,CONFIGURATION, SYSTEM, SEQUENCER.
4. Front Panel Display Indications	---	Voltage, Current, Power, CV, CC, CP, External Voltage, External Current, Address, LFP, Autostart, Safetstart, Foldback V/I, Remote (communication), RS/USB/LAN/IEEE communication, Trigger, Load/Store Cell.

ENVIRONMENTAL CONDITIONS		
1.Operating temperature	---	0~50°C, 100% load.
2.Storage temperature	---	-30~85°C
3.Operating humidity	%	20~90% RH (no condensation).
4.Storage humidity	%	10~95% RH (no condensation).
5.Altitude (*17)	---	Operating: 10000ft (3000m), output current derating 2%/100m or Ta derating 1°C/100m above 2000m. Non operating: 40000ft (12000m).

MECHANICAL			
1.Cooling		---	Forced air cooling by internal fans. Air flow direction: from Front panel to power supply rear
2.Weight	GSP 10kW	Kg	Less than 15.5Kg.
3.Dimensions (WxHxD)	GSP 10kW	mm	W: 423, H: 88, D: 441.5 (Without busbars and busbars cover), W: 423, H: 88, D: 664.5 (Including busbars and busbars cover) (Refer to Outline drawing).
2.Weight	GSP 15kW	Kg	Less than 23.5Kg.
3.Dimensions (WxHxD)	GSP 15kW	mm	W: 423, H: 132.5, D: 441.5 (Without busbars and busbars cover), W: 423, H: 132.5, D: 664.5 (Including busbars and busbars cover) (Refer to Outline drawing).
4.Vibration		---	MIL-810G, method 514.6, Procedure I, test condition Annex C - 2.1.3.1
5.Shock		---	Less than 20G, half sine, 11mSec. Unit is unpacked.

SAFETY/EMC			
1.Applicable standards:	Safety	---	UL60950-1, CSA22.2 No.60950-1, IEC60950-1, EN60950-1.
1.1. Interface classification		---	Vout ≤40V Models: Output, J1,J2,J3,J4,J5,J6,J7,J8 (sense) and ,J9 (communication options) are SELV. 60≤ Vout≤ 600V Models: Output, J8 (sense) are hazardous, J1,J2,J3,J4,J5,J6,J7 and J9 (communication options) are SELV
1.2 Withstand voltage		---	Vout ≤40V Models: Input - Output (SELV): 4242VDC 1min, Input - Ground: 2835VDC 1min. 60V≤Vout≤100V Models: Input - Output: 4242VDC 1min, Input - SELV: 4242VDC 1min, Output - SELV: 850VDC 1min, Output - Ground: 1500VDC 1min, Input - Ground: 2835VDC 1min. 100<Vout≤600V Models: Input - Output: 4242VDC 1min, Input - SELV: 4242VDC 1min, Output - SELV: 1275VDC 1min, Output - Ground: 2500VDC 1min, Input - Ground: 2835VDC 1min.
1.3 Insulation resistance		---	100Mohm at 25ºC, 70%RH.
2.Conducted emmision		---	IEC/EN61204-3 Industrial environment, Annex H table H.1 , FCC Part 15-A, VCCI-A .
3.Radiated emission		---	IEC/EN61204-3 Industrial environment, Annex H table H.3 and H4, FCC Part 15-A, VCCI-A
4. EMC compliance	EMC(*18)	---	According to IEC/EN61204-3 Industrial environment

"NOTES:
*1: Minimum voltage is guaranteed to maximum 0.1% of rated output voltage.
*2: Minimum current is guaranteed to maximum 0.2% of rated output current.
*3: Derate 15A/1°C above 40°C.
*4: For cases where conformance to various safety standards (UL, IEC, etc…) is required, to be described as 190-240Vac (50/60Hz) for 3-Phase
*5: 3-Phase 200V models: At 200Vac input voltage, 3-Phase 400/480V: At 380Vac input voltage. With rated output power.
*6: Not including EMI filter inrush current, less than 0.2mSec.
*7: 3-Phase 200V models: 170~265Vac, 3-Phase 400V models: 342~460Vac, 3-Phase 480V models: 342~528Vac. Constant load.
*8: From No-Load to Full-Load, constant input voltage. Measured at the sensing point in Remote Sense.
*9: For 10V~150V models: Measured with JEITA RC-9131C (1:1) probe. For 300~600V model: Measured with 100:1 probe.
*10: The maximum voltage on the power supply terminals must not exceed the rated voltage.
*11: From 10% to 90% or 90% to 10% of Rated Output Voltage, with rated, resistive load.
*12: From 90% to 10% of Rated Output Voltage.
*13: For load voltage change, equal to the unit voltage rating, constant input voltage.
*14: For 10V model the ripple is measured at 2V and rated output current. For other models, the ripple is measured at 10% of rated output voltage. B.W 5Hz~1MHz.
*15: The Constant Current programming, readback and monitoring accuracy do not include the warm-up and Load regulation thermal drift.
*16: Measured at the sensing point.
*17: For 10V model Ta derating 2°C/100m."
*18:"Signal and control ports interface cables length: Less than 3m, DC output power port cables length: Less than 30m.
*19:Max. ambient temperature for using IEEE is 40°C.
*20:GSP10kW For 10V model only: Max. output current for using IEEE is 800A up to 40°C and 900A up to 30°C.
*20:GSP15kW For 10V model only: Max. output current for using IEEE is 1200A up to 40°C and 1350A up to 30°C.

Outline Drawing GENESYS™ G1.7kW & G5kW

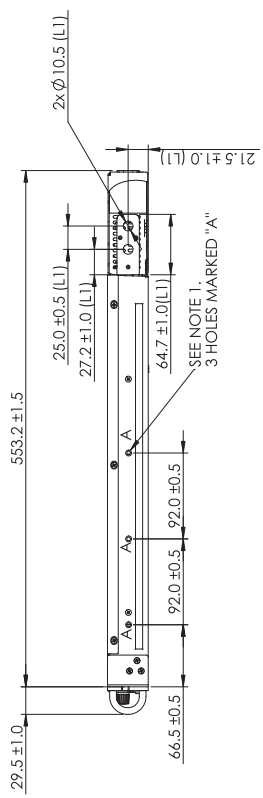

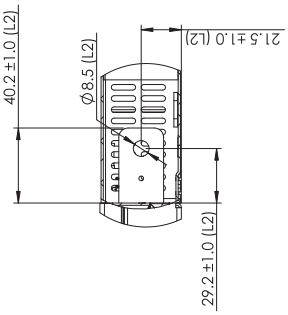

TABLE 1

KW	1.7	5
V		
10	L1	L1
20	L2	L1
30	L2	L1
40	L2	L1
60~100	L2	L2

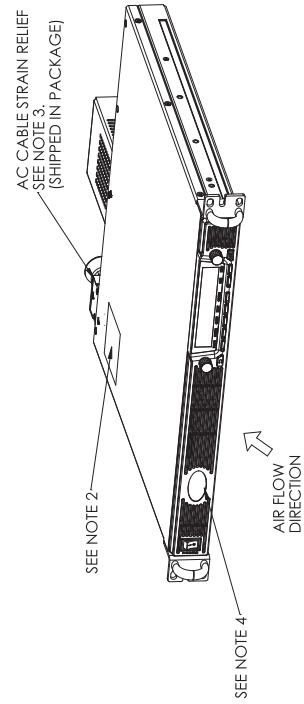

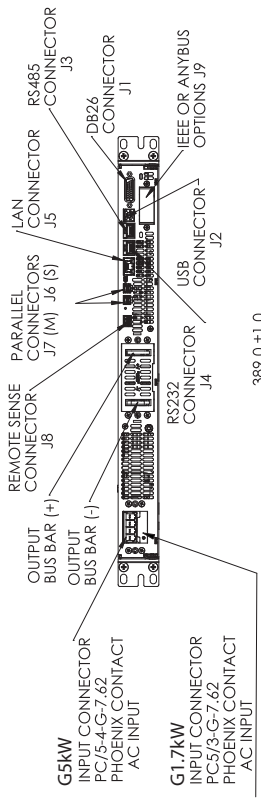

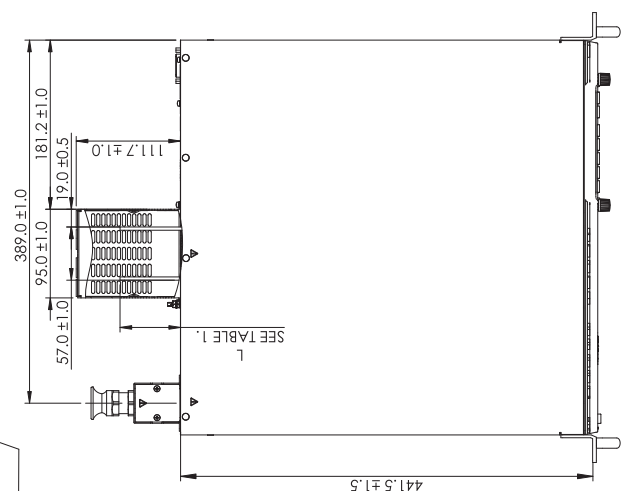

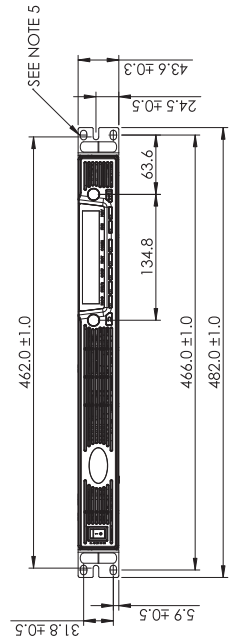

NOTE
1. MOUNTING HOLES FOR SLIDES P/N:CC3001-00-S160,GENERAL DEVICES OR EQUIVALENT.
   USE #10-32x0.38INCH x3 SCREWS FOR EACH SLIDE.
   ENSURE THAT THE SCREWS DO NOT PENETRATE MORE THAN 6.0mm INTO THE UNIT.
2. AC INPUT RATING , SAFETY APPROVAL SYMBOLS AND EU REPRESENTATIVE LABEL
   ARE SHOWN HERE ACCORDING TO THE SPECIFICATIONS.
3. STRAIN RELIEF DEVICE P/N: 5301 5440 LAPP GROUP.
4. MODEL NAME , OUTPUT RATING AND COMPANY LOGO ARE SHOWN HERE ACCORDING TO THE SPECIFICATIONS.
5. MOUNTING HOLES FOR 19" RACK, USE M6x16 SCREWS TO FIX THE UNIT TO THE RACK.

Outline Drawing GENESYS™ G1.7kW & G5kW (Models 150V/300V/600V)

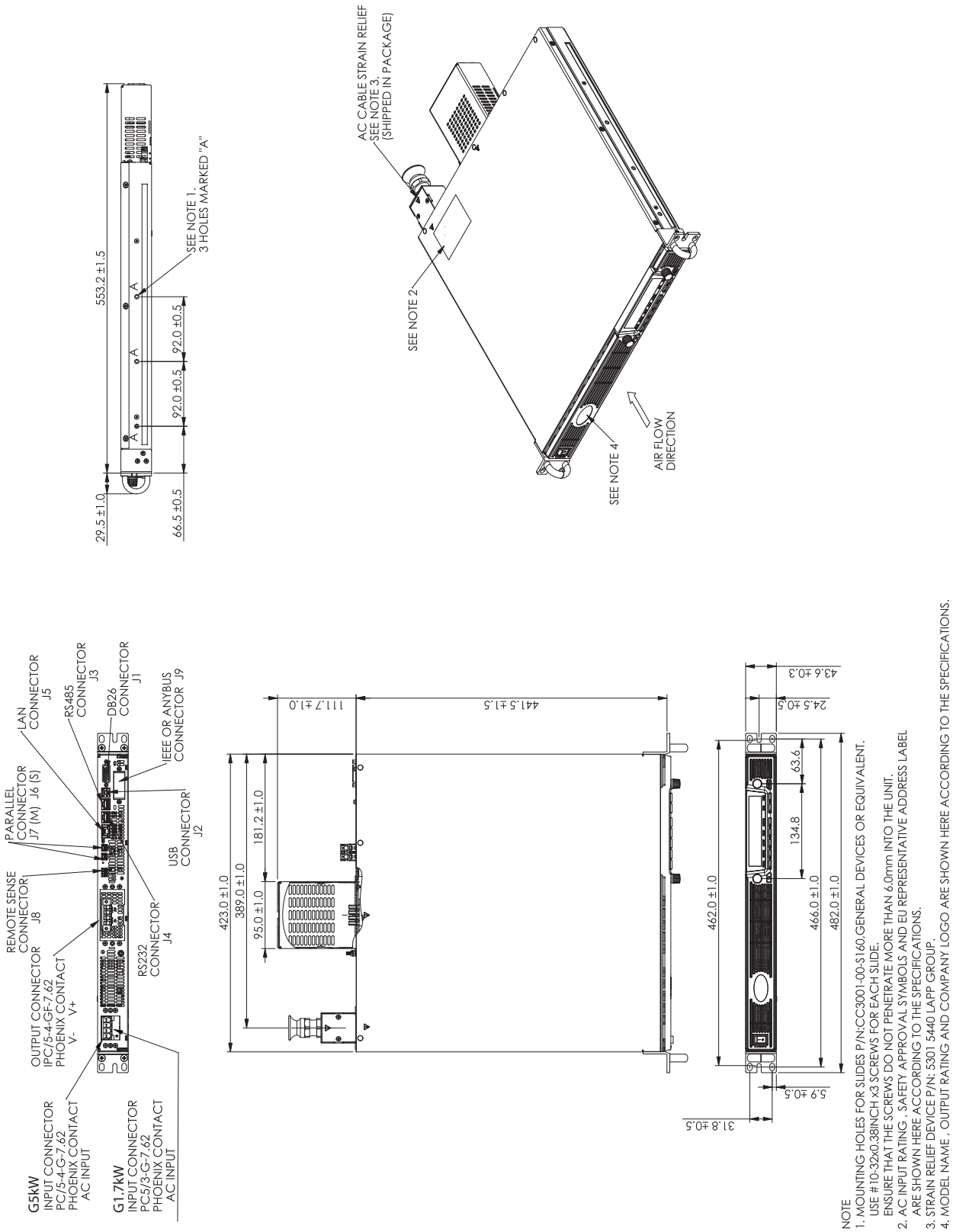

Outline Drawing GENESYS™ GB1.7kW & GB5kW

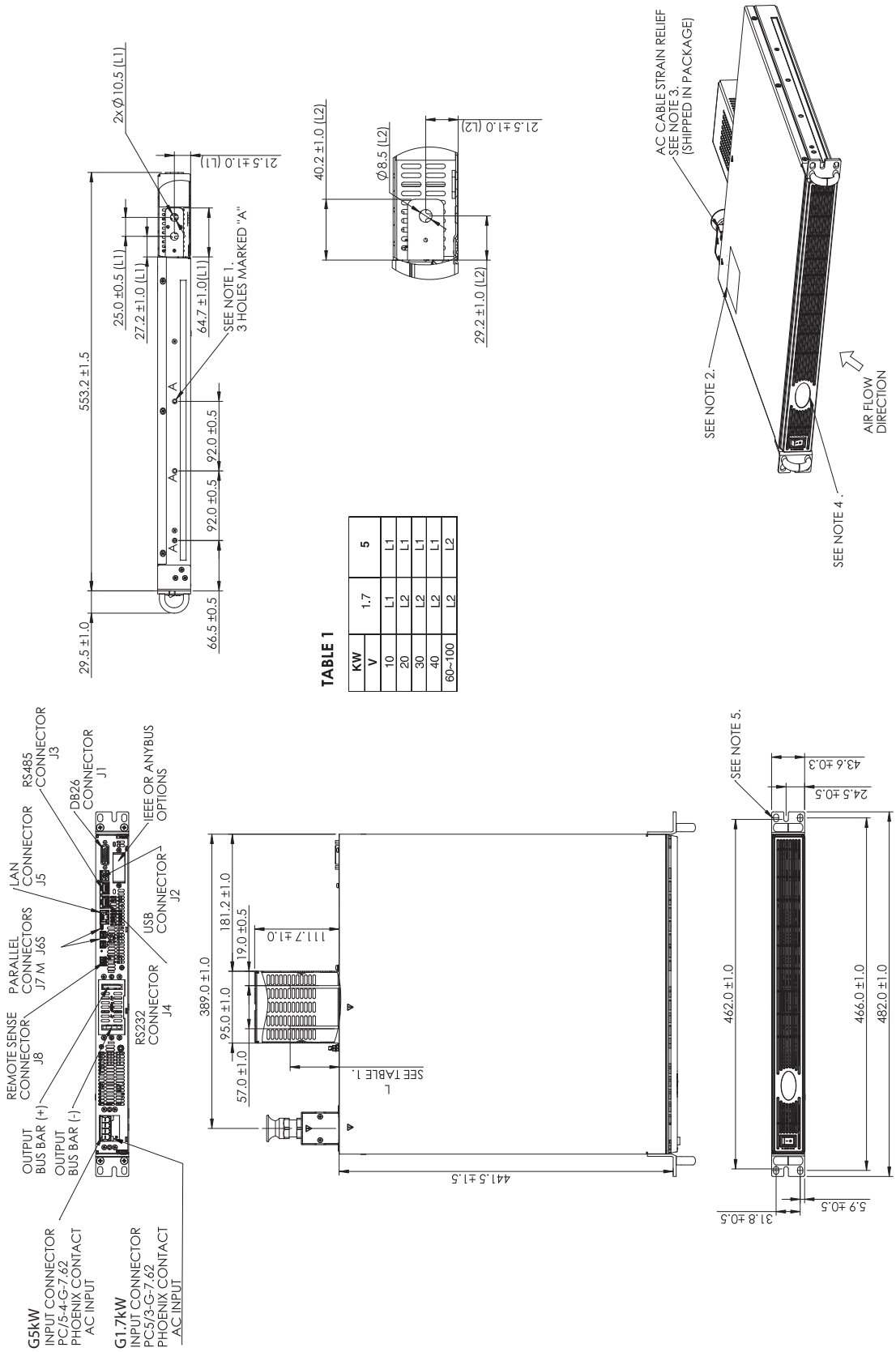

TABLE 1

KW	1.7	5
V		
10	L1	L1
20	L2	L1
30	L2	L1
40	L2	L1
60~100	L2	L2

NOTE
1. MOUNTING HOLES FOR SLIDES P/N:CC3001-00-S160,GENERAL DEVICES OR EQUIVALENT.
   USE #10-32x0.38INCH x3 SCREWS FOR EACH SLIDE.
   ENSURE THAT THE SCREWS DO NOT PENETRATE MORE THAN 6.0mm INTO THE UNIT.
2. AC INPUT RATING AND SAFETY APPROVAL SYMBOLS ARE SHOWN HERE ACCORDING TO THE SPECIFICATIONS.
3. STRAIN RELIEF DEVICE P/N: 5301 5440 LAPP GROUP.
4. MODEL NAME , OUTPUT RATING AND COMPANY LOGO ARE SHOWN HERE ACCORDING TO THE SPECIFICATIONS.
5. MOUNTING HOLES FOR 19" RACK. USE M6x16 SCREWS TO FIX THE UNIT TO THE RACK.

Outline Drawing GENESYS™ GSP10kW

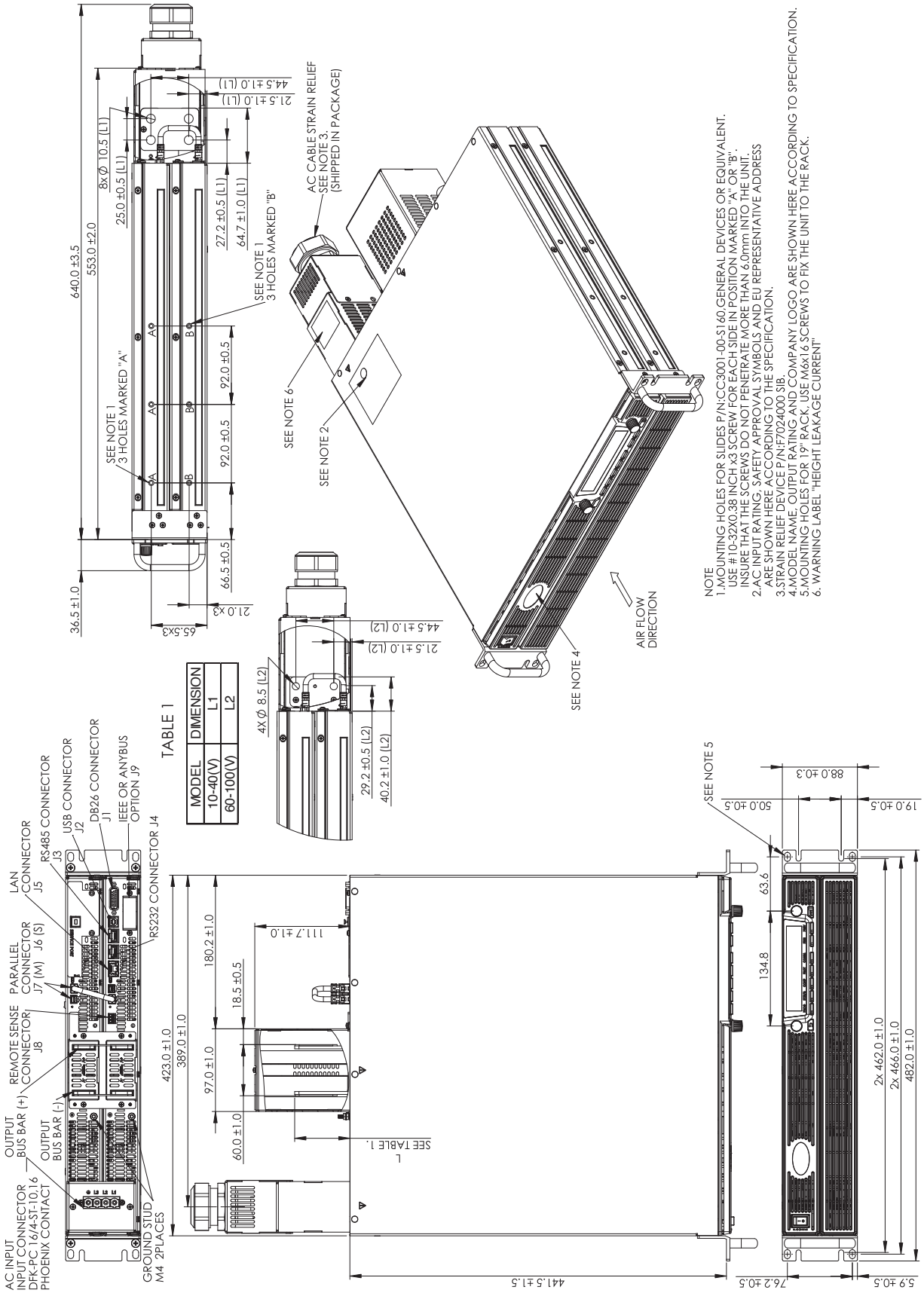

Outline Drawing GENESYS™ GSP15kW

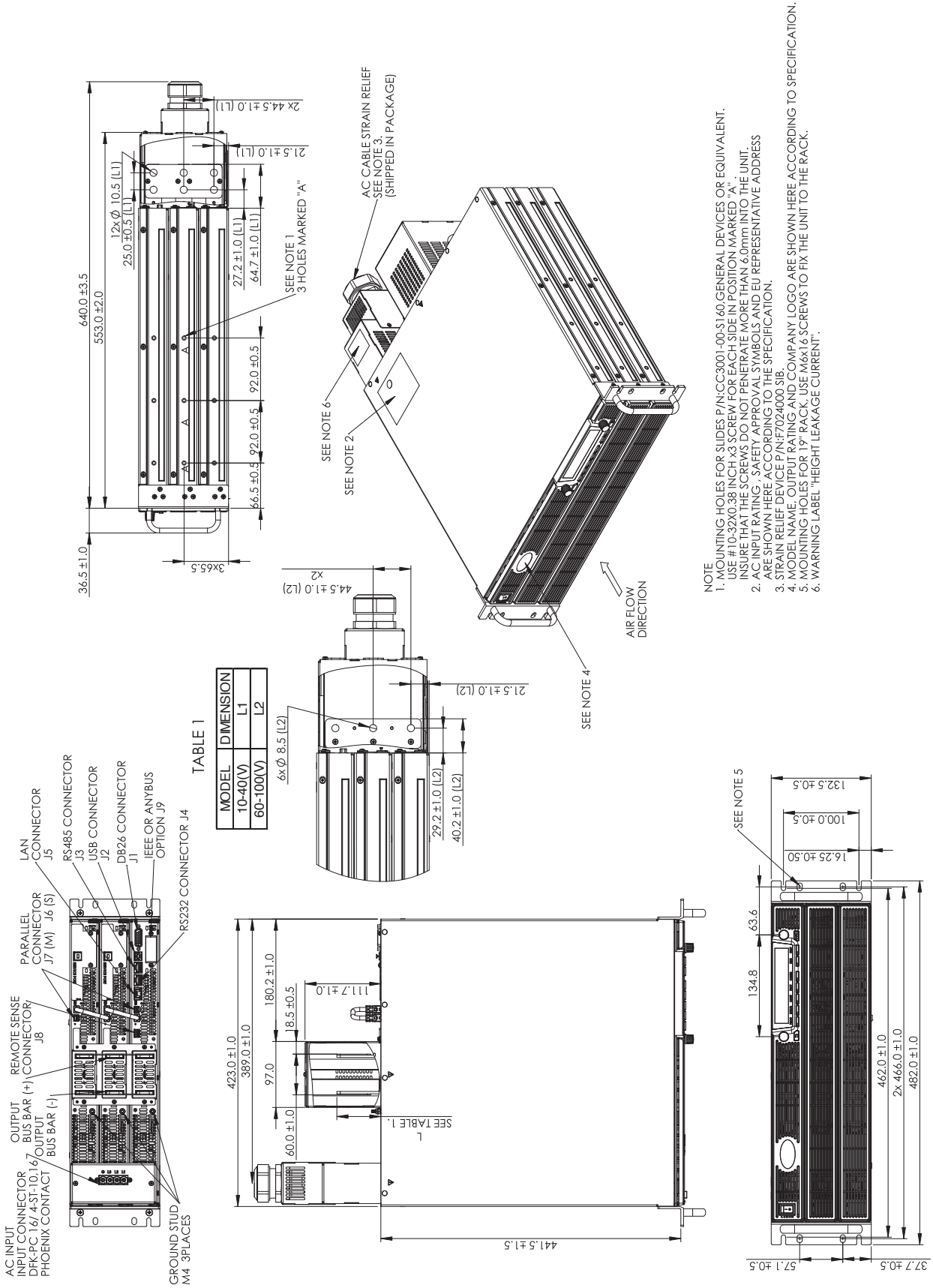

TABLE 1

MODEL	DIMENSION
10-40(V)	L1
60-100(V)	L2

NOTE
1. MOUNTING HOLES FOR SLIDES P/N:CC3001-00-S160,GENERAL DEVICES OR EQUIVALENT. USE #10-32X0.38 INCH x3 SCREW FOR EACH SIDE IN POSITION MARKED "A". INSURE THAT THE SCREWS DO NOT PENETRATE MORE THAN 6.0mm INTO THE UNIT.
2. AC INPUT RATING , SAFETY APPROVAL SYMBOLS AND EU REPRESENTATIVE ADDRESS ARE SHOWN HERE ACCORDING TO THE SPECIFICATION.
3. STRAIN RELIEF DEVICE P/N:F7024000 SIB.
4. MODEL NAME, OUTPUT RATING AND COMPANY LOGO ARE SHOWN HERE ACCORDING TO SPECIFICATION.
5. MOUNTING HOLES FOR 19" RACK, USE M6x16 SCREWS TO FIX THE UNIT TO THE RACK.
6. WARNING LABEL "HEIGHT LEAKAGE CURRENT".

Outline Drawing GENESYS™ Air Filter Kit

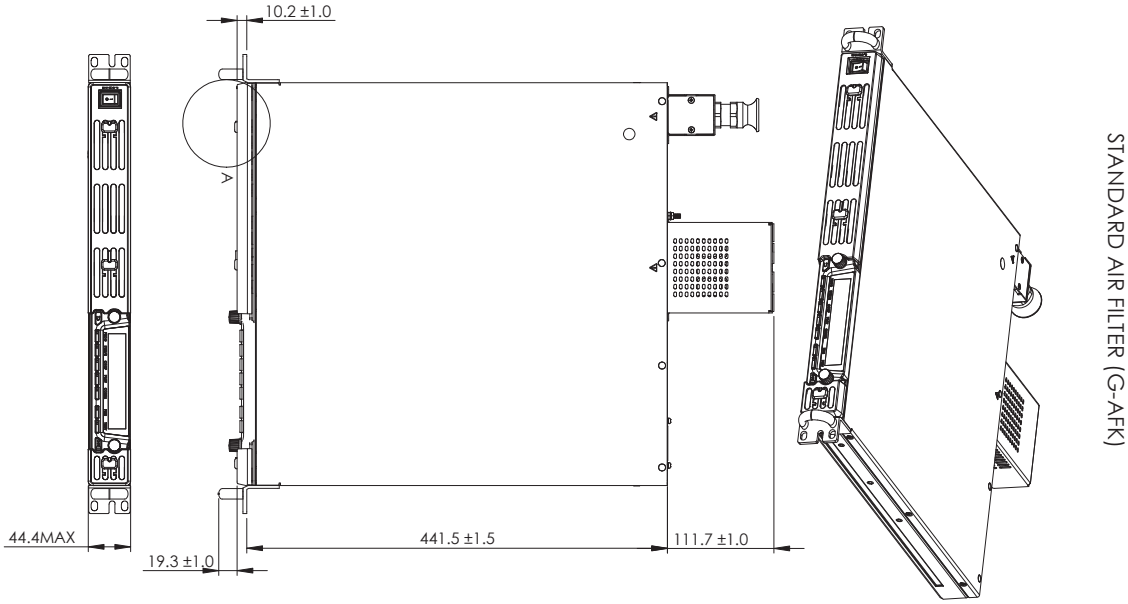

STANDARD AIR FILTER (G-AFK)

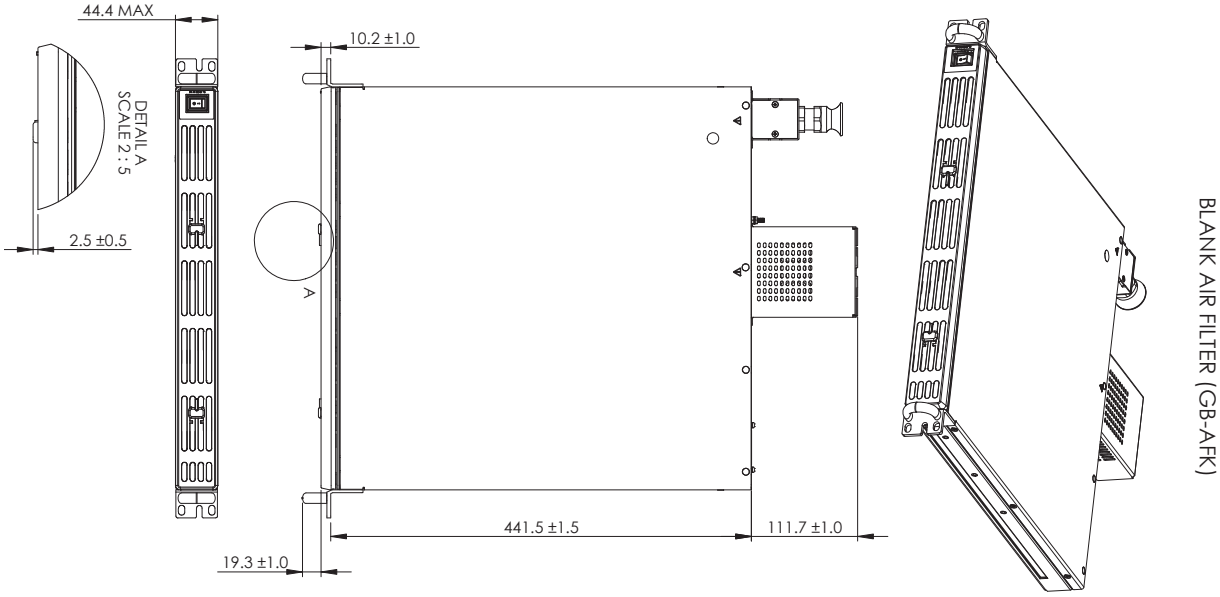

BLANK AIR FILTER (GB-AFK)

Front Panel Air Filter Assembly

Front panel dust cover is available for dusty air environment applications

Dust cover is removable snap-in filter (for easy maintenance)

- Part Number (for standard unit) : ***G-AFK***

- Part Number (for unit with blank front panel) : ***GB-AFK***

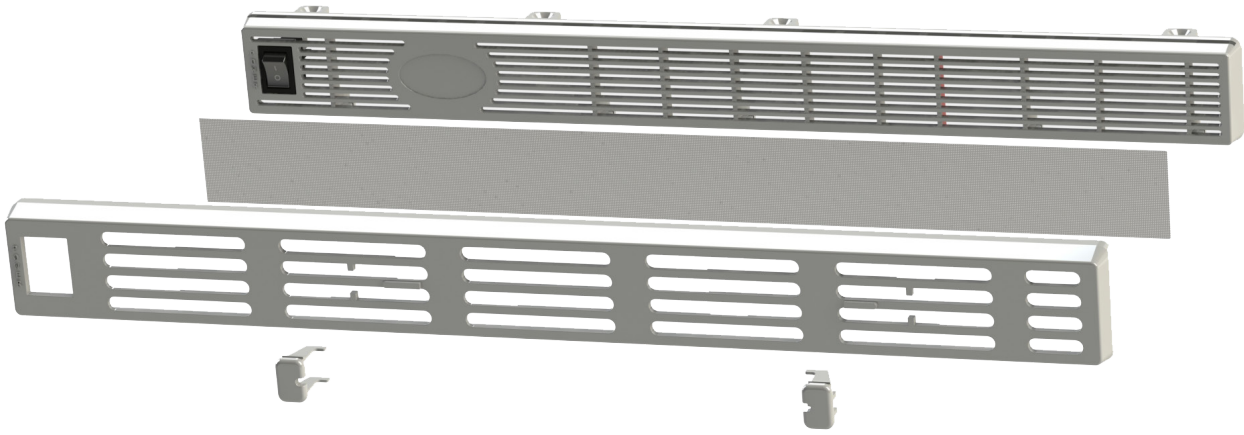

For GSP 10kW/15kW series order part number: GSP10kW-AFK / GSP15kW-AFK

Accessories

1. Front Panel dust filter / Field installation kit:

Technical Specifications: Unit with Air Filter Assembly Installed

• Derating (enviromental):
• Operating Temperature
• For all models (except 10V): 0˚C to +40˚C; For 10V model: 0˚C to +30˚C, derate 5A/˚C for 30˚C < Ta < +40˚C
• Altitude
• For all models (except 10V): derate 2˚C/100m or 2% of load/100m (above 2000m)
• For 10V model: derate 1˚C/100m or 2% of load/100m (above 2000m)

Filter Foam Technical Specifications

• Material: reticulated polyurethane foam
• Thickness: 4.0mm
• Porosity: 30ppi
• Operating Temperature Range: 0˚C to +60˚C
• Storage Temperature Range: -40˚C to +85˚C
• Humidity: 95% RH

Air Filter Assembly Components

Standard Unit (P/N: G-AFK)
• Air Filter Cover (two pieces)
• Slide Button #1 (two locations: near AC ON/OFF switch and near left-hand side of front panel display)
• Slide Button #2 (one location: right-hand side of front panel display)
• Filter foam (two pieces)

Blank Front Panel Unit (P/N: GB-AFK)

• Air Filter Cover (one piece)
• Slide Button #1 (two locations) • Filter foam (one piece)

TDK

NORTH AMERICA

TDK-Lambda Americas Inc
405 Essex Rd. Neptune, NJ 07753
Tel: +1-732-922-9300 Fax: +1-732-922-1441
E-mail: sales@us.tdk-lambda.com
www.us.tdk-lambda.com/hp

UK

TDK-Lambda UK Ltd.
Kingsley Avenue Ilfracombe, Devon
EX 34 8ES United Kingdom
Tel: +44-1271-856666 Fax: +44-1271-864894
E-mail: powersolutions@uk.tdk-lambda.com
www.uk.tdk-lambda.com

FRANCE

3 Avenue du Canada,
Parc Technopolis - Bâtiment Sigma,
91940 Les Ulis – France CS 41077
Tel: +33 1 60 12 71 65
Fax: +33 1 60 12 71 66
E-mail: france@fr.tdk-lambda.com
www.fr.tdk-lambda.com

GERMANY

TDK-Lambda Germany GmbH
Karl-Bold-Str.40,
D-77855 Achern, Germany
Tel: +49-7841-666-0 Fax: +49-7841-500-0
E-mail: info.germany@de.tdk-lambda.com
www.de.tdk-lambda.com

AUSTRIA

TDK-Lambda Germany GmbH Austria Sales Office
Aredstrasse 22 2544 Leobersdorf, Austria
Tel: +43-2256-65584
Fax: +43-2256-64512
E-mail: gunther.goisser@de.tdk-lambda.com
www.de.tdk-lambda.com

ITALY

France Sas Succursale Italiana
Via dei Lavoratori 128/130
IT 20092 Cinisello Balsamo, Milano, Italy
Tel: +39-02-6129-3863 Fax: +39-02-6129-0900
E-mail: info.italia@it.tdk-lambda.com
www.it.tdk-lambda.com

ISRAEL

TDK-Lambda Ltd.
Sales Office: Alexander Yanai 1, Petah Tikva, 4927701, ISRAEL
Tel: +972-3-9024-333 Fax: +972-3-9024-777
Plant: 56 Haharoshet St.,
Karmiel Industrial Zone 2165158, Israel
Tel: +972-4-9887-491 Fax: +972- 4-9583-071
www.tdk-lambda.co.il E-mail: info@tdk-lambda.co.il

JAPAN

TDK-Lambda Corporation
3-9-1, Shibaura, Minato-ku,
Tokyo 108-0023, Japan
TEL.81-3-6852-7125
FAX.81-3-6852-7140
www.tdk-lambda.com

CHINA

Wuxi TDK-Lambda Electronics Co. Ltd, Shanghai Office
5th Floor Kehui Tower, 1188 Qinzhou Road (North),
Xuhui District Shanghai 200233, China
Tel: +86-21-6485-0777 Fax: +86-21-6485-0666
www. cn.tdk-lambda.com

Beijing Branch of Wuxi TDK-Lambda Electronic Co. Ltd.
Room 12B11-12B12, Unit 7 DACHENG SQUARE, No.28
Xuanwumenxi Street, Xuanwu District Beijing, 100053, CHINA
Tel: +86-10-6310-4872 Fax: +86-10-6310-4874
www. cn.tdk-lambda.com

Shenzhen Branch of Wuxi TDK-Lambda Electronics Co.,Ltd.
69/F, Ping An Finance Centre, 5033 Yitian Road,
Futian District, Shenzhen,China
Tel: +86-755-83588261 Fax: +86-755-83588260
www.cn.tdk-lambda.com

KOREA

TDK-Lambda Corporation Korea Branch
Seocho-Dong,12F. Songnam Bldg. 273, Gangnam Daero,
Seocho-Gu, Seoul 06730, Republic of Korea
Tel: +82-2-3473-7051
Fax: +82-2-3472-9137
www.tdk-lambda.co.kr

SINGAPORE

TDK-Lambda Singapore Pte.Ltd.
Blk 1008 Toa Payoh North # 07-01/03
Singapore 318996
Tel: +65-6251-7211 Fax: +65-6250-9171
www.tdk-lambda.com.sg

INDIA

TDK - LAMBDA Singapore Pte Ltd (India Branch)
No.989, 1st Cross, 2nd Floor, 13th Main,
HAL 2nd Stage, Bangalore, Karnataka, India – 560 008
Tel: +91-80-43550 500
Fax: +91-80-43550 501
www.in.tdk-lambda.com

MALAYSIA

TDK-Lambda Malaysia Sdn. Bhd.
c/o TDK (Malaysia) Sdn Bhd
Lot 709, Nilai Industrial Estate 71800 Nilai
Negeri Sembilan, Malaysia
Tel: + 60 6-799 1130
Fax: + 60 6 799 3277
www.tdk-lambda.com.my

TDK·Lambda

GLOBAL NETWORK

Innovating Reliable Power

TDK-Lambda EMEA
www.emea.tdk-lambda.com