Industrial Test Comm

50W to 300W DC-DC Converters, Single Output High Density Power Modules

Features	Benefits
• High Density	• Smaller Package Size
• Up to 425 Vdc Input	• Cover HVDC Telecom Requirements
• Fixed Operating Frequency	• Easier System Filtering
• High Efficiency	• Better System Thermal Management
• Certified to IEC/EN62477-1 OVC III	• No External Transformer Needed

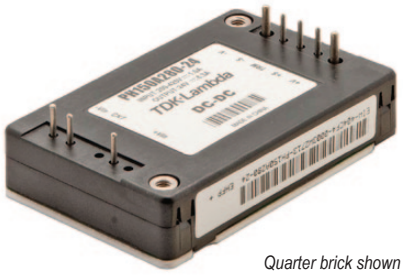

Quarter brick shown

Specification

Model		PH50A280	PH75A280	PH100A280	PH150A280	PH300A280
ITEMS						
Input Voltage range	-	200 - 425 VDC				
Input Current (1)	A	See Model selector				
Output Voltage Accuracy	%	+/-2				
Maximum Ripple and Noise (5)	mV	3.3 & 5V: 100mV, 12 & 15V: 150mV, 24V: 240mV, 28V: 280mV, 48V: 400mV (300W 480mV)				
Temperature Coefficient	-	<0.02°C / W				
Overvoltage protection (2) (4)	-	See model selector				
Overcurrent protection (6)	%	102-150				
Remote sense (2)	-	Yes				
Remote ON/OFF control (2)	-	yes - SHORT=ON OPEN=OFF				
Series Operation (2)	-	Yes				
Parallel Operation	-	No				
Operating Temperature (2)	°C	-40°C to +100°C (Baseplate), -40°C to +85°C (Ambient)				
Storage Temperature	°C	-40°C to +100°C				
Humidity (non condensing)	-	Operating: 5 - 95%RH, Storage: 5 - 95%RH				
Cooling	-	Conduction cooled				
Withstand Voltage (3)	-	I/P to Baseplate 2.5kVAC (20mA), I/P to O/P: 3kVAC (20mA), O/P to Baseplate: 500VAC (20mA) for 1min				
Isolation Resistance	MΩ	>100MΩ at 25°C & 70%RH, Output to Baseplate: 500VDC				
Vibration	-	10 - 55Hz (1 minute sweep), Amplitude 0.825mm Constant (Maximum 49.0m/s²) X, Y, Z 1 hour each				
Shock	-	196.1 m/s ²				
Safety Agency Approvals	-	UL60950-1, CSA60950-1, EN60950-1, EN62477-1 (OVC III, PH300A only), CE mark (LVD)				
Weight (Typ)	g	50 - 150W: 55, 300W: 100				
Size (W x H x D) (7)	mm	Quarter Brick Format 37.2 x 12.7 x 58.3				Half Brick Format 61.0 x 12.7 x 57.9
Warranty	yrs	5				

Notes:

(1) At 280 VDC input and maximum output current (baseplate temperature = 25°C)
(2) Refer to detailed Specifications & Instruction Manual
(3) This specification applies to the Power Module as a stand-alone item
(4) OVP reset: Line OFF or Control OFF
(5) 200 - 425 VDC input, Constant load
(6) Constant current limitation - Automatic recovery
(7) Refer to outline drawing

Read Instruction Manual carrefully before using the Power module unit

Model Selector

Model	Output Voltage	Output Adjust Range (V)	Max Output Current (A)	Max Output Power (W)	Efficiency (3) (%)	Input Current (A)	Load Reg (1) (mV)	Line Reg (2) (mV)	OVP (V)
PH50A280-5	5V	4 - 6	10	50	86	0.21	10	10	6.25 - 7.5
PH50A280-12	12V	9.6 - 13.2	4.2	50.4	89	0.20	24	24	13.8 - 17.4
PH50A280-24	24V	19.2 - 26.4	2.1	50.4	89	0.20	48	48	27.6 - 34.8
PH50A280-48	48V	38.4 - 52.8	1.1	52.8	89	0.21	96	96	55.2 - 69.6
PH75A280-3.3	3.3V	2.97 - 3.96	15	49.5	83	0.22	10	10	4.3 - 6.6
PH75A280-5	5V	4 - 6	15	75	86	0.32	10	10	6.25 - 7.5
PH75A280-12	12V	9.6 - 13.2	6.3	75.6	89	0.31	24	24	13.8 - 17.4
PH75A280-15	15V	12.5 - 16.5	5	75	90	0.30	30	30	17.2 - 21.8
PH75A280-24	24V	19.2 - 26.4	3.2	76.8	90	0.31	48	48	27.6 - 34.8
PH75A280-28	28V	23.3 - 30.8	2.7	75.6	90	0.30	56	56	32.2 - 40.6
PH75A280-48	48V	38.4 - 52.8	1.6	76.8	90	0.31	96	96	55.2 - 69.6
PH100A280-3.3	3.3V	2.97 -3.96	20	66	83	0.29	10	10	4.3 - 6.6
PH100A280-5	5V	4 - 6	20	100	86	0.42	10	10	6.25 - 7.5
PH100A280-12	12V	9.6 - 13.2	8.4	100.8	88	0.41	24	24	13.8 - 17.4
PH100A280-24	24V	19.2 - 26.4	4.2	100.8	89	0.41	48	48	27.6 - 34.8
PH100A280-48	48V	38.4 - 52.8	2.1	100.8	90	0.40	96	96	55.2 - 69.6
PH150A280-12	12V	9.6 - 13.2	12.5	150	88	0.62	24	24	13.8 - 17.4
PH150A280-15	15V	12.5 - 16.5	10	150	90	0.6	30	30	17.2 - 21.8
PH150A280-24	24V	19.2 - 26.4	6.3	151.2	89	0.61	48	48	27.6 - 34.8
PH150A280-28	28V	23.3 - 30.8	5.4	151.2	90	0.61	56	56	32.2 - 40.6
PH150A280-48	48V	38.4 - 52.8	3.2	153.6	90	0.60	96	96	55.2 - 69.6
PH300A280-12	12V	7.2 - 14.4	25	300	89	1.22	24	24	15 - 17.4
PH300A280-24	24V	14.4 - 28.8	12.5	300	90.5	1.20	48	48	30 - 34.8
PH300A280-28	28V	16.8 - 33.6	10.8	302.4	91	1.20	56	56	35 - 40.6
PH300A280-48	48V	28.8 - 57.6	6.3	302.4	92	1.19	96	96	60 - 69.6

Notes: (1) No load - Full load, Constant input voltage (2) 200 - 425 VDC input, Constant load (3) At 280VDC input and maximum output current

Derating Curve PH-A 280 Series

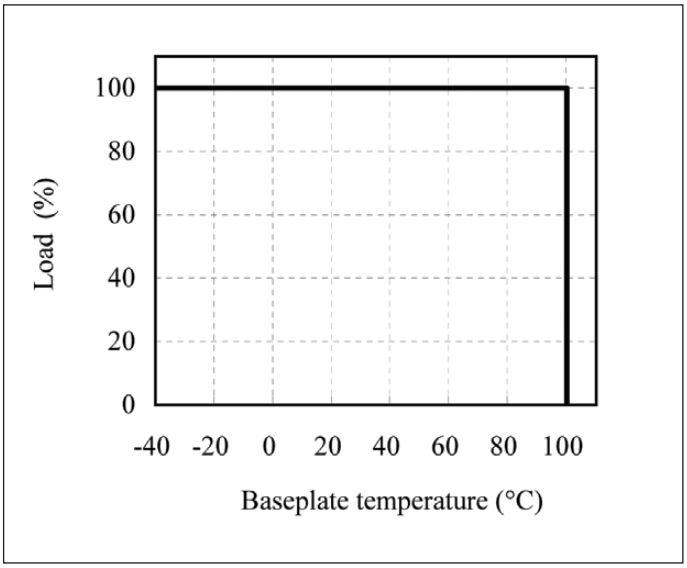

Pin Assignments

Pin Description	Function
+Vin	Positive Input Terminal
-Vin	Negative Input Terminal
+S	Positive Remote Sense
-S	Negative Remote Sense
+V	Positive Output Terminal
-V	Negative Output Terminal
CNT	On/Off Control Terminal
TRM	Output Adjustment Trim Pin

Basic Connection PH-A 280 Series

Read instruction manual carefully before using the Power Module

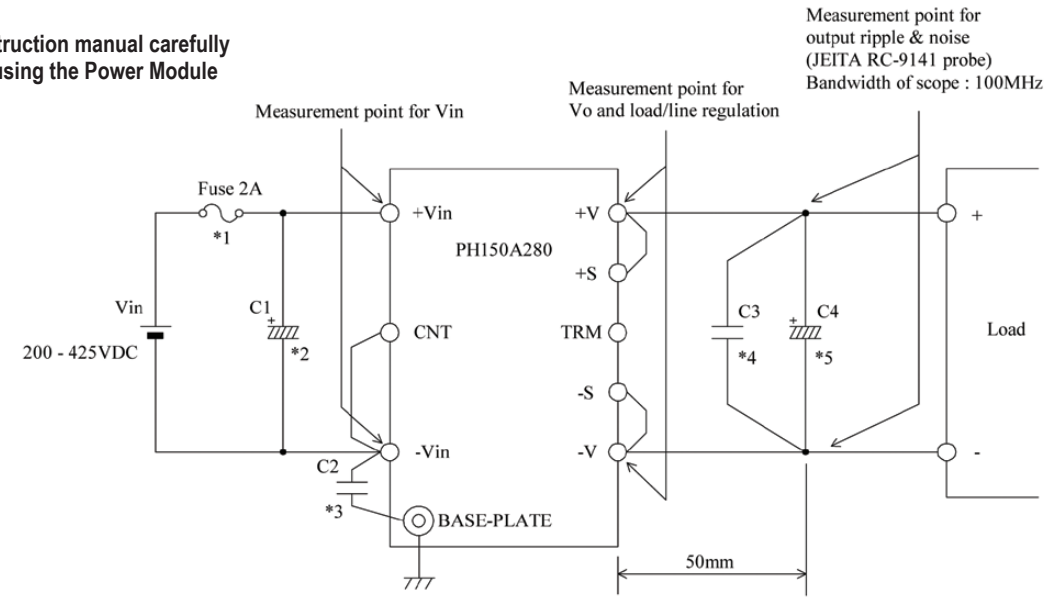

Outline Drawing PH50-A to PH150-A 280 Series

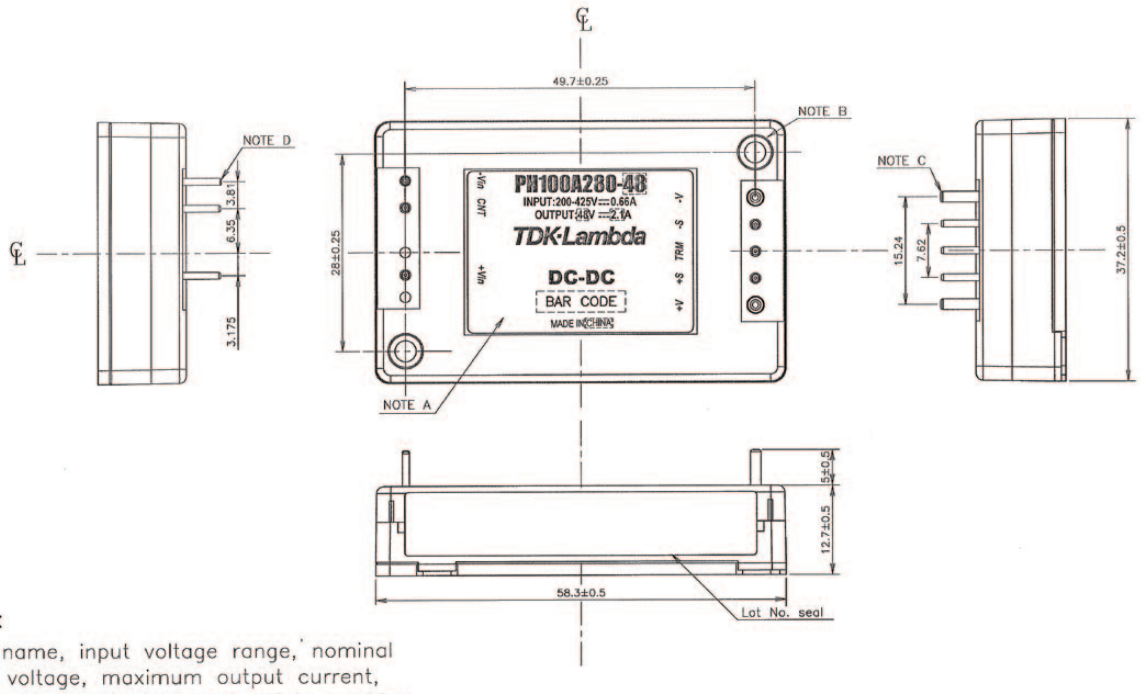

NOTES :

A: Model name, input voltage range, nominal output voltage, maximum output current, country of manufacture and safety marking (C-UL-US & CE marking) are shown here in accordance with the specifications.

B: M3 tapped holes 2 for customer chassis mounting (FG).

C: Output pin : 2-ø1.5

D: Input and Signal pin : 6-ø1.0

E: Unless otherwise specified dimensional tolerance : ±0.25mm

Outline Drawing PH300-A 280 Series

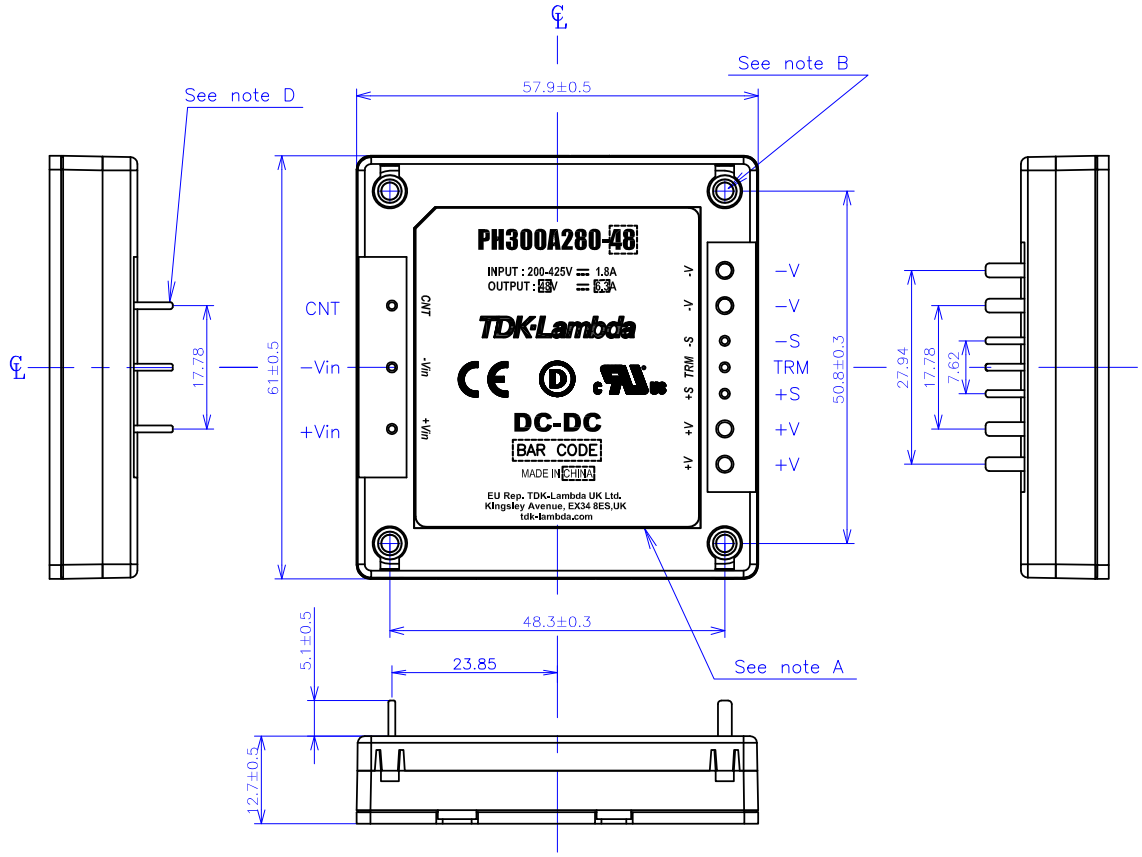

NOTES :

A: Model name, input voltc
output voltage, Maximum output current,
country of manufacture and safety marking
(C–UL–US,DEMKO & CE marking) are shown
here in accordance with the specifications.

B: M3 threaded holes 4 for customer chassis mounting (FG).

C: Output terminals : 4–ø2

D: Input and signal terminals : 6–ø1

E: Unless otherwise specified dimensional
tolerance : ±0.25

TDK-Lambda France SAS
3 Avenue du Canada
Parc Technopolis
Bâtiment Sigma
91940 les Ulis
France
Tel: +33 1 60 12 71 65
Fax: +33 1 60 12 71 66
france@fr.tdk-lambda.com
www.fr.tdk-lambda.com

Italy Sales Office
Via dei Lavoratori 128/130
20092 Cinisello Balsamo (MI)
Italy
Tel: +39 02 61 29 38 63
Fax: +39 02 61 29 09 00
info.italia@it.tdk-lambda.com
www.it.tdk-lambda.com

Netherlands
info@nl.tdk-lambda.com
www.nl.tdk-lambda.com

TDK-Lambda Germany GmbH
Karl-Bold-Strasse 40
77855 Achern
Germany
Tel: +49 7841 666 0
Fax: +49 7841 5000
info.germany@de.tdk-lambda.com
www.de.tdk-lambda.com

Austria Sales Office
Aredstrasse 22
2544 Leobersdorf
Austria
Tel: +43 2256 655 84
Fax: +43 2256 645 12
info@at.tdk-lambda.com
www.de.tdk-lambda.com

Switzerland Sales Office
Bahnhofstrasse 50
8305 Dietlikon
Switzerland
Tel: +41 44 850 53 53
Fax: +41 44 850 53 50
info@ch.tdk-lambda.com
www.de.tdk-lambda.com

Nordic Sales Office
Haderslevvej 36B
DK-6000 Kolding
Denmark
Tel: +45 2911 9556
info@dk.tdk-lambda.com

TDK-Lambda UK Ltd.
Kingsley Avenue
Ilfracombe
Devon EX34 8ES
United Kingdom
Tel: +44 (0) 12 71 85 66 66
Fax: +44 (0) 12 71 86 48 94
powersolutions@uk.tdk-lambda.com
www.uk.tdk-lambda.com

TDK-Lambda Ltd.
Kibbutz
Givat Hashlosha 48800
Israel
Tel: +9 723 902 4333
Fax: +9 723 902 4777
info@tdk-lambda.co.il
www.tdk-lambda.co.il

C.I.S.
Commercial Support:
Tel: +7 (495) 665 2627
Technical Support:
Tel: +7 (812) 658 0463
info@tdk-lambda.ru
www.tdk-lambda.ru

Local Distribution

www.emea.tdk-lambda.com