Medical Industrial Test Broadcast Comms Renewable

550W - 900W
Modular power supply.

Features	Benefits
• Industry Leading Flexibility	Suits your application
• Screw, Fast-on or IEC connection	Simplifies design into system
• Worldwide Safety Approvals	Supports global use
• Up to 11 outputs	Eliminates need for additional supplies
• 3 Year Warranty	Low cost of ownership

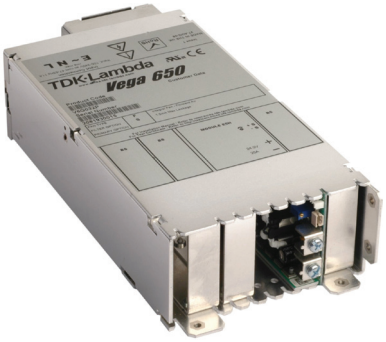

Input	
Input Voltage / Frequency	90-264Vac / 47 - 63 Hz (440Hz with reduced PFC)
Input Fuse	16A / 250Vac HBC Fast acting (not user accessible)
Inrush Current	<40A at 25°C and 264Vac (cold start)
Leakage Current	See 'How To Create A Product Description' for details

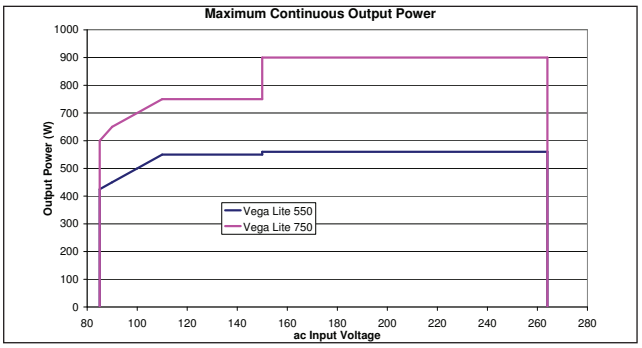

How To Create A Product Description

The extensive range of output modules and options make it possible to achieve all popular combinations of Volts and Amps. You can create your own Vega configuration online at http://vega.emea.tdk-lambda.com/ . This method checks your configuration and offers the optimum solution. Alternatively, you can do this manually by using the guide below.

1. Calculate total output power to select the appropriate converter, then select required Cooling, Connection, Leakage Current and Controls/ Signals from the following table:

Converter	**V5**	**5**50W	
	V7	**7**50/900W	
Cooling	**F**	**F**orward air - standard	
Input Connection	**S**	**S**crew	
Leakage Current	**S**	Standard 1.5mA	(max leakage current at 264Vac, 63Hz)
	L	290µA	
Primary Option	**F**	ac fail, psu+fan inhibit, 5V/100mA standby	
	E	ac fail, psu+fan enable, 5V/100mA standby	

V5	F	S	S	F

2. Select Output Modules and options from the Available Output Voltages tables.
   Example - if you require 5V / 18A with output inhibit :-
   a) Select 5L1S as closest match for voltage & current
   b) add suffix 'N' for output inhibit if required (eg 5L1S**N**)
   c) Repeat for other outputs.
   Ensure you do not select more than a total of 5 slots width of modules. This will create a complete product description eg **V5FSSF 5L1SN 12/12H3/3S 24C5S** which represents a four output 550W VegaLite with Forward air, Screw terminal input, 1.5mA leakage, ac Fail, Global inhibit & 5V/100mA standby supply with the following outputs:
   Output 1 = 5V/35A (with output inhibit, module good and current share option). Output 2 = 12V / 10A, Output 3 = 12V / 6A, Output 4 = 24V / 10A, all with screw terminal outputs.
3. Contact TDK-Lambda to validate configuration and issue a part number.

OUTPUT VOLTAGES (single output modules)

	1 slot wide		1.5 slots wide		2 slots wide		3 slots wide	
Output Voltage	Module	Current	Module	Current	Module	Current	Module	Current
1.8V	1.8C1S	35A	1.8D1LS	50A	1.8E1S	60A		
2V	2C1S	35A	2D1LS	50A	2E1S	60A		
3.3V	3.3C1S	35A	3.3D1LS	50A	3.3E1S	60A		
5V	5L1S	35A	5D1HS	50A	5E2S	60A		
6.5V	6.5B2S	25A	6.5D2S	45A	6.5E2S	60A		
12V	12C3S	18A	12D3S	24A	12E3LS	40A		
15V	15C3S	18A	15D3S	24A	15E4S	30A		
18V	18C4S	14A	18D4S	18A	18E4S	30A		
24V	24C5S	10A	24D5S	15A	24E5HS	25A		
28V	28C5S	10A	28D5S	15A	28E5HS	25A		
36V	36HH5/4S	4.5A			36BB4S	10A		
48V	48HH5/4S	4.5A			48C5B4S	10A	48DD5S	15A

OUTPUT VOLTAGES (twin output modules) - all 1 slot width

		Channel 1					
	Output Voltage	5V / 12A	12V / 10A	15V / 10A	18V / 5A	24V / 5A	28V / 5A
Channel 2	**1.8V / 8A**	5/1.8H1H/1LS					
	2V / 8A	5/2H1H/1LS					
	3.3V / 8A	5/3.3H1H/1LS					
	5V / 8A		12/5H3/1HS	15/5H3/1HS	18/5H5/1HS	24/5H5/1HS	28/5H5/1HS
	12V / 6A	5/12H1H/3S	12/12H3/3S	15/12H3/3S	18/12H5/3S	24/12H5/3S	28/12H5/3S
	15V / 6A	5/15H1H/3S	12/15H3/3S	15/15H3/3S	18/15H5/3S	24/15H5/3S	28/15H5/3S
	18V / 4.5A				18/18H5/4S	24/18H5/4S	28/18H5/4S
	24V / 4.5A				18/24H5/4S	24/24H5/4S	28/24H5/4S

OUTPUT VOLTAGES (single output modules)

Module	Adjustment Range (Volts)			Current (Amps)	Slots
C1S	1.8	-	3.4	35	1
D1LS	1.8	-	3.8	50	1.5
E1S	1.8	-	3.4	60	2
L1S	4.2	-	5.1	35	1
D2S	3.8	-	7.5	45	1.5
D1HS	3.9	-	5.1	50	1.5
E2S	3.8	-	7.5	60	2
B2S	5	-	8	25	1
C3S	9.1	-	15	18	1
D3S	8	-	15	24	1.5
E3LS	8	-	12.5	40	2
D4S	14	-	18	18	1.5
E4S	14	-	19	30	2
C4S	16.3	-	21.5	14	1
C5S	21.6	-	30	10	1
D5S	21	-	28	15	1.5
E5HS	24	-	28	25	2
HH5/4S	32.5	-	48	4.5	1
BB4S	32.6	-	40	10	2
C5B4S	43	-	48	10	2
DD5S	42	-	56	15	3

OUTPUT VOLTAGES (twin output modules)

Module	V1 Adjustment Range (Volts)			Current	V2 Adjustment Range (Volts)			Current (Amps)	Slots
H1H/1LS	3.9	-	5.1	12	1.8	-	3.4	8	1
H1H/3S	3.9	-	5.1	12	9.1	-	15.5	6	1
H3/1HS	9.1	-	15.5	10	3.9	-	5.1	8	1
H3/3S	9.1	-	15.5	10	9.1	-	15.5	6	1
H5/1H	16.2	-	28	5	3.9	-	5.1	8	1
H5/3	16.2	-	28	5	9.1	-	15.5	6	1
H5/4	16.2	-	28	5	16.3	-	24	4.5	1

Options - Single output Modules*		Options - Twin output Modules*	
N	Output Inhibit, Module Good & Current Sharing	**N**	Output Inhibit, Module Good & Remote Sense
		R	Remote Sense only

* see configuring guide

Isolation

Input to Output	Reinforced	2 x MOPPs (3rd edition 60601) 4kVac, 5.7kVdc type tested to 4kVac (equivalent to 5.7kVdc), production tested to 4.3kVdc.
Input to Earth	Basic	2.3kVdc
Output to Earth / Output to Earth		200Vdc

Output Specification

Voltage / Current	See output voltages tables	
Turn on time	1.5s max	at 90Vac and 100% rated output power
Rise time	<50ms	to 90% of voltage, monotonic rise above 10%
Turn on overshoot	<5% or 250mV	Load type dependent, no overshoot with resistive load
Efficiency	75%	typical at 230Vac & 100% rated power, configuration dependent
Hold up	16ms min	at 100Vac and 100% rated power
Ripple and Noise	<1% or 50mV	pk-pk, using EIAJ test method & 20MHz bandwidth
Voltage Accuracy	<1%	of set voltage
Remote Sense	Yes	standard on single output modules, max 0.75V total line drop. Option for twin output modules
Minimum Load	No	on any output
Temperature Coefficient	<0.02%	of rated voltage per °C
Load Regulation	<0.5% or 50mV	for 0-100% load change
Line Regulation	<0.1%	for 100-264Vac input change
Cross Regulation	<0.2%	for 100% load change on any other output
Transient Response	<6% or 300mV	of set voltage for 50% load change (above 25% load)
Recovery	500µs	for recovery to 1% or 100mV of set voltage
Over Voltage Protection	Yes	Refer to application notes for details
Over Current Protection (singles)	105-125%	of rated current, constant current characteristic
Short Circuit Protection	<150%	of rated current, when output voltage <1%
Over Temperature Protection	Yes	shuts down all outputs and fan. Cycle ac off/on to reset Shutdown temperature varies according to ambient, output power and input voltage. ac fail signal (if fitted) provides 5ms warning of thermal shutdown

Environment

Temperature	0°C to 65°C operational, -40°C to 70°C storage (max 12 months).
Derating	50°C to 65°C derate total output power and each output current by 2.5% per °C
Low Temp Startup	-20°C
Humidity	5 - 95% RH non condensing
Shock	±3 x 30g shocks in each plane, total 18 shocks 30g shock = 11ms (+/-0.5msec), half sine Conforms to EN60068-2-27, EN60068-2-47, IEC68-2-27, IEC68-2-47, JIS C0041-1987. Conforms to MIL-STD-810E/F, Method 516.5, Pro I, IV, VI
Vibration	Single axis 10 - 500 Hz at 2g (sweep and endurance at resonance) in all 3 planes Conforms to EN60068-2-6, IEC68-2-6 Conforms to MIL-STD-810E, Method 514.4, Pro I, Cat 1, 9
Altitude	5000 metres operational/non operational
Pollution	Degree 2, Material group IIIb
IP Rating	IP 10

Emissions EN61000-6-3:2007, EN60601-1-2:2001		
Radiated Electric Field	EN55011, EN55032	(as per CISPR.11/22) Class B, FCC47 part 15 subpart B see application note for details. Only for 'S' type leakage variants.
Conducted Emissions	EN55011, EN55032	(as per CISPR.11/22) Class B, FCC47 part 15 subpart B Only for 'S' type leakage variants. 'L' types meet Class A
Conducted Harmonics	EN61000-3-2	Class A
Flicker	EN61000-3-3	Compliant - d_{max} only

Immunity EN61000-6-2:2005, EN60601-1-2:2001				Criteria
Electrostatic Discharge	EN61000-4-2	Level 4	Air discharge 15kV, Contact discharge 8kV	A
Electromagnetic Field	EN61000-4-3	Level 3	12V/m	A
Fast / Burst Transient	EN61000-4-4	Level 4	ac input tested to 4.4kV dc output tested to 2.2kV Tested at 5kHz and 100kHz	A
Surge Immunity	EN61000-4-5	Level 3	Common mode - 2.2kV Differential - 1.1kV	A
Conducted RF Immunity	EN61000-4-6	Level 3	12V	A
Power Frequency Magnetic Field	EN61000-4-8	Level 4	30A/m	A
Voltage Dips, Variations, Interruptions	EN61000-4-11	Class 3		A B for 5s interruptions

Approvals / Accreditations	
IEC/EN 60950-1, UL60950-1 / CSA 22.2 No 60950-1	File E135494
IEC/EN 60601-1, UL/CSA 60601-1, ANSI/AAMI ES60601-1 CAN/CSA-C22.2 No 60601-1-08	File E349607 (only for L leakage variants)
IEC/EN 61010-1	File E331788
CE Mark (EN60950-1)	LV Directive 2006/95/EC
CB certificate and Report available on request	*Please check with technical sales for status of approvals*
Designed and manufactured under the control of ISO9001 and ISO13485 (including risk management).	

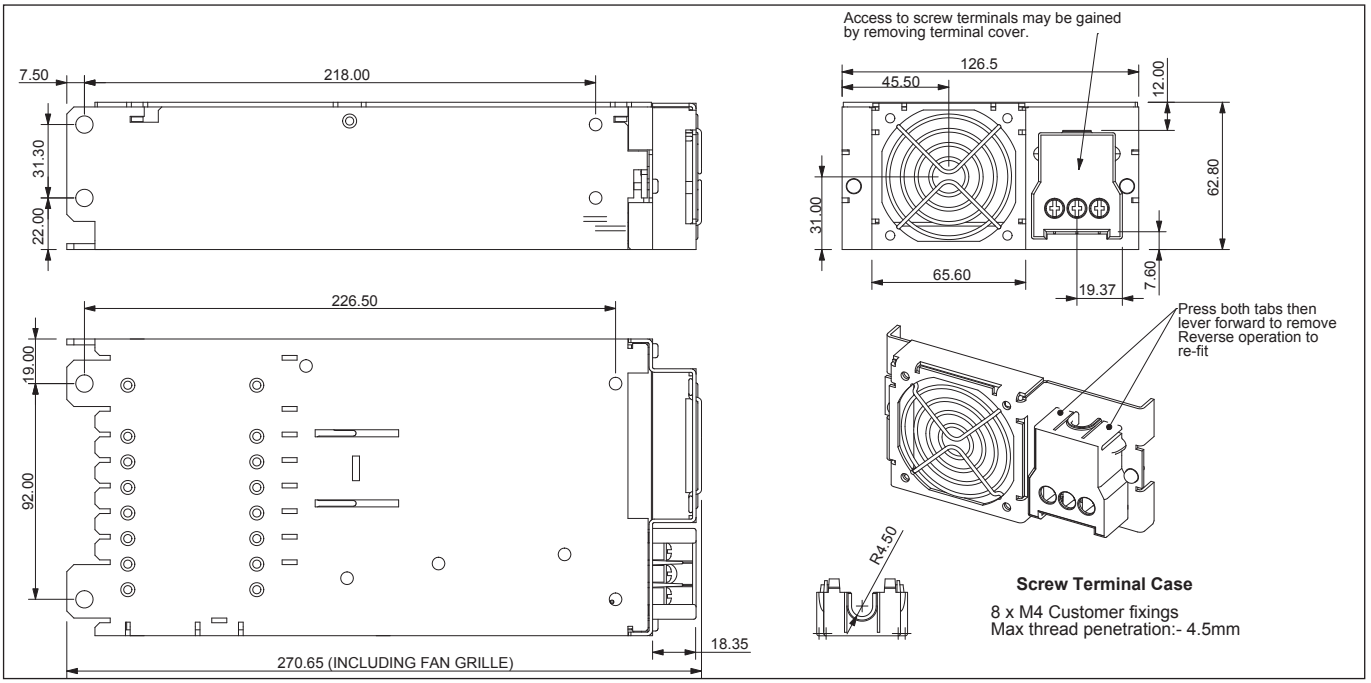
Access to screw terminals may be gained by removing terminal cover.
7.50
218.00
31.30
22.00
226.50
19.00
92.00
270.65 (INCLUDING FAN GRILLE)
18.35
126.5
45.50
12.00
62.80
31.00
65.60
19.37
7.60
Press both tabs then lever forward to remove Reverse operation to re-fit
R4.50
Screw Terminal Case
8 x M4 Customer fixings
Max thread penetration:- 4.5mm

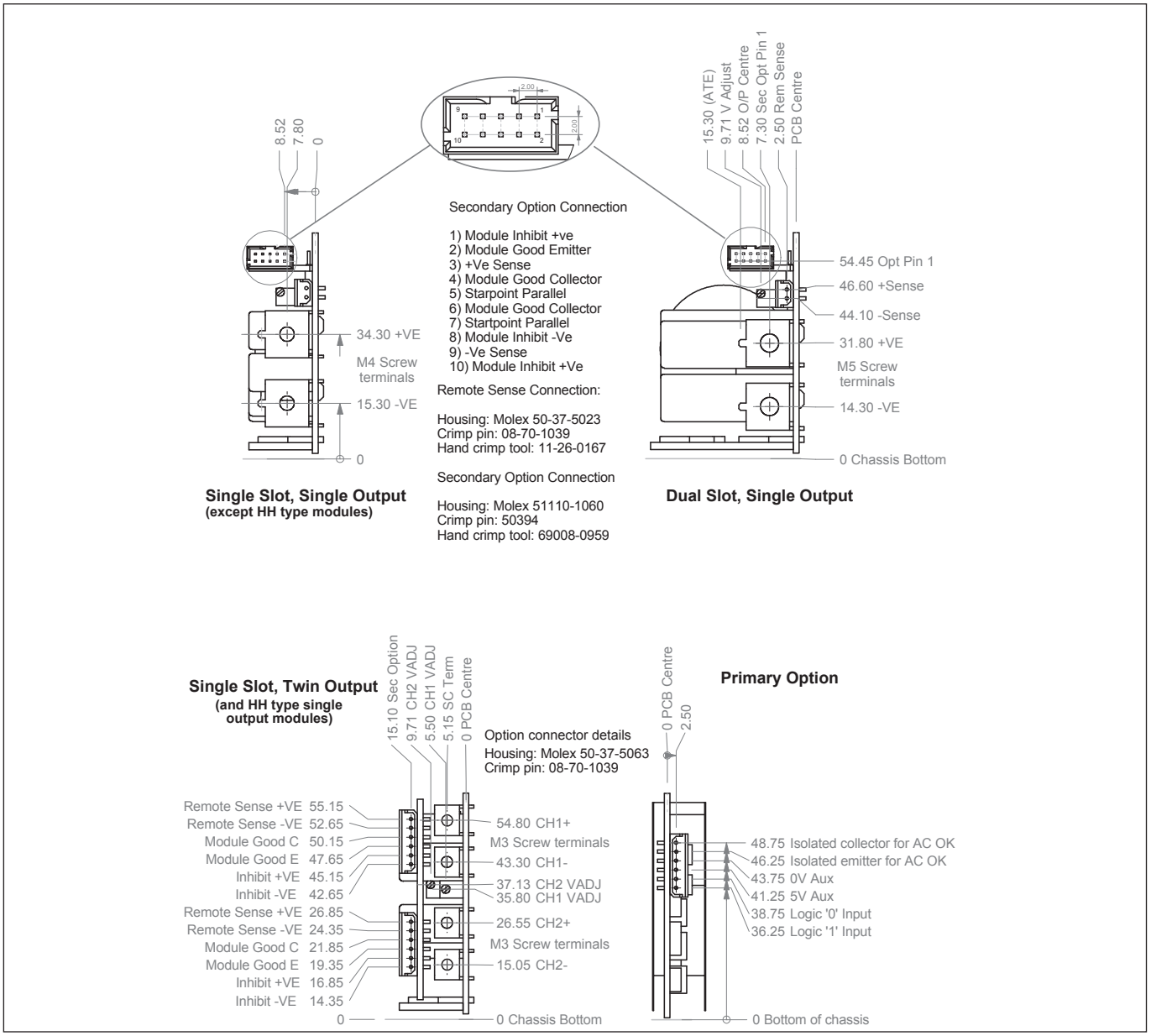
8.52
7.80
0
34.30 +VE
M4 Screw terminals
15.30 -VE
0
Single Slot, Single Output
(except HH type modules)
Secondary Option Connection
1) Module Inhibit +ve
2) Module Good Emitter
3) +Ve Sense
4) Module Good Collector
5) Starpoint Parallel
6) Module Good Collector
7) Startpoint Parallel
8) Module Inhibit -Ve
9) -Ve Sense
10) Module Inhibit +Ve
Remote Sense Connection:
Housing: Molex 50-37-5023
Crimp pin: 08-70-1039
Hand crimp tool: 11-26-0167
Secondary Option Connection
Housing: Molex 51110-1060
Crimp pin: 50394
Hand crimp tool: 69008-0959
15.30 (ATE)
9.71 V Adjust
8.52 O/P Centre
7.30 Sec Opt Pin 1
2.50 Rem Sense
PCB Centre
54.45 Opt Pin 1
46.60 +Sense
44.10 -Sense
31.80 +VE
M5 Screw terminals
14.30 -VE
0 Chassis Bottom
Dual Slot, Single Output
Single Slot, Twin Output
(and HH type single output modules)
15.10 Sec Option
9.71 CH2 VADJ
5.50 CH1 VADJ
5.15 SC Term
0 PCB Centre
Option connector details
Housing: Molex 50-37-5063
Crimp pin: 08-70-1039
Remote Sense +VE 55.15
Remote Sense -VE 52.65
Module Good C 50.15
Module Good E 47.65
Inhibit +VE 45.15
Inhibit -VE 42.65
Remote Sense +VE 26.85
Remote Sense -VE 24.35
Module Good C 21.85
Module Good E 19.35
Inhibit +VE 16.85
Inhibit -VE 14.35
0
54.80 CH1+
M3 Screw terminals
43.30 CH1-
37.13 CH2 VADJ
35.80 CH1 VADJ
26.55 CH2+
M3 Screw terminals
15.05 CH2-
0 Chassis Bottom
0 PCB Centre
2.50
Primary Option
48.75 Isolated collector for AC OK
46.25 Isolated emitter for AC OK
43.75 0V Aux
41.25 5V Aux
38.75 Logic '0' Input
36.25 Logic '1' Input
0 Bottom of chassis

TDK-Lambda France SAS
3 Avenue du Canada
Parc Technopolis
Bâtiment Sigma
91940 les Ulis
France
Tel: +33 1 60 12 71 65
Fax: +33 1 60 12 71 66
france@fr.tdk-lambda.com
www.fr.tdk-lambda.com

Italy Sales Office
Via dei Lavoratori 128/130
20092 Cinisello Balsamo (MI)
Italy
Tel: +39 02 61 29 38 63
Fax: +39 02 61 29 09 00
info.italia@it.tdk-lambda.com
www.it.tdk-lambda.com

Netherlands
info@nl.tdk-lambda.com
www.nl.tdk-lambda.com

TDK-Lambda Germany GmbH
Karl-Bold-Strasse 40
77855 Achern
Germany
Tel: +49 7841 666 0
Fax: +49 7841 5000
info.germany@de.tdk-lambda.com
www.de.tdk-lambda.com

Austria Sales Office
Aredstrasse 22
2544 Leobersdorf
Austria
Tel: +43 2256 655 84
Fax: +43 2256 645 12
info@at.tdk-lambda.com
www.de.tdk-lambda.com

Switzerland Sales Office
Bahnhofstrasse 50
8305 Dietlikon
Switzerland
Tel: +41 44 850 53 53
Fax: +41 44 850 53 50
info@ch.tdk-lambda.com
www.de.tdk-lambda.com

Nordic Sales Office
Haderslevvej 36B
DK-6000 Kolding
Denmark
Tel: +45 2911 9556
info@dk.tdk-lambda.com

TDK-Lambda UK Ltd.
Kingsley Avenue
Ilfracombe
Devon EX34 8ES
United Kingdom
Tel: +44 (0) 12 71 85 66 66
Fax: +44 (0) 12 71 86 48 94
powersolutions@uk.tdk-lambda.com
www.uk.tdk-lambda.com

TDK-Lambda Ltd.
Kibbutz
Givat Hashlosha 48800
Israel
Tel: +9 723 902 4333
Fax: +9 723 902 4777
info@tdk-lambda.co.il
www.tdk-lambda.co.il

C.I.S.
Commercial Support:
Tel: +7 (495) 665 2627
Technical Support:
Tel: +7 (812) 658 0463
info@tdk-lambda.ru
www.tdk-lambda.ru

Local Distribution

www.emea.tdk-lambda.com