Medical Industrial Comm Broadcast

2 x4" 40-65W AC-DC Medical & ITE Power Supplies

Features	Benefits
• Industry Standard Footprint	• Availability to Second Source
• Wide Range AC Input	• Global Operation
• Dual Input Fuses	• Easier System Compliance

Specification

Model		CSS65A
Input Voltage Range	-	90 - 264VAC (47 - 63Hz)
Inrush Current (115/230VAC)	A	Less than 45A / 90A, 25°C ambient cold start
Input Current (115/230VAC)	A	2 / 1
Leakage Current	uA	<100uA 264VAC 63Hz
Hold Up Time (Typ)	ms	>10ms at 115VAC input
Off-Load Power Consumption	W	<75mW
Average Efficiency	%	5V: 86%, 12-54V: 89%
Temperature Coefficient	%/°C	±0.05%/°C
Output Voltage Accuracy	%	±1%
Output Adjustment Range	-	None
Remote Sense	-	Yes
Minimum Load	A	None
Output Regulation	%	5V: ±5%, 12-28V: ±3%, 48-54V: ±2%
Ripple & Noise	%	See Model Selector
Overcurrent Protection	-	110 - 180%, Auto-Recovery
Overvoltage Protection	V	110 - 130% of nominal (Cycle input power to reset)
Operating Temperature	°C	0°C to +70°C derate linearly to 50% load from 50°C to 70°C
Storage Temperature	°C	-40°C to +85°C
Humidity (non condensing)	%RH	10 - 90%RH
Cooling	-	Convection
Withstand Voltage	VAC	Input to Ground 1.5kVAC, Input to Output 4kVAC (Reinforced) (2 x MOPPS), Output to Ground 1.5kVAC (1xMOPPS).
Isolation Resistance	MΩ	>20MΩ at 25°C & 70%RH, Output to Ground 500VDC
Vibration (non operating)	-	23.52m/s^2 (10 - 55Hz: constant sweep 1 min X, Y, Z for 1 hour)
Shock	-	< 196.1 m/s^2 (20G)
Safety Agency Approvals	-	UL/CSA/IEC/EN60601-1, ANSI/AAMI ES60601-1,UL/CSA/IEC/EN60950-1, CE Mark
Conducted & Radiated EMI	-	EN55011-B, FCC Class B
Immunity	-	EN60601-1-2, IEC61000-4
Altitude	m	Medical: 3,000m, ITE: 5,000m
Weight (Typ)	g	136g
Size (WxLxH)	mm	50.4 x 101.6 x 27.5 mm
Warranty	yrs	3

Outline Drawing CSS65A Series

Input/Output Connectors (Molex)

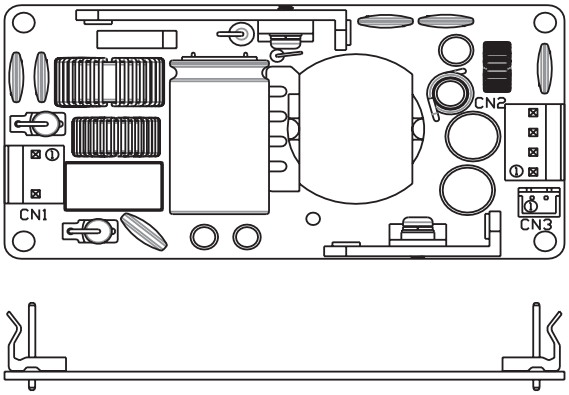

CN1: Input Connector (Molex)
Mates with 5265 09-76-1020 or equivalent

Pin #	Signal
1	AC Line
2	AC Neutral

CN1: Input Connector (JST)
Mates with JST VHR-3N or equivalent

Pin #	Signal
1	AC Neutral
2	AC Line

CN2: Output Connector (Molex)
Mates with 5239 09-52-4044 or equivalent

Pin #	Signal
1	+Vout
2	+Vout
3	0V
4	0V

CN2: Output Connector (JST)
Mates with JST VHR-4N or equivalent

Pin #	Signal
1	0V
2	0V
3	+Vout
4	+Vout

CN3: Remote Sense (JST Only)

Pin #	Signal
1	+V sense
2	0V sense

JST Input/Output Connectors shown (/J option)

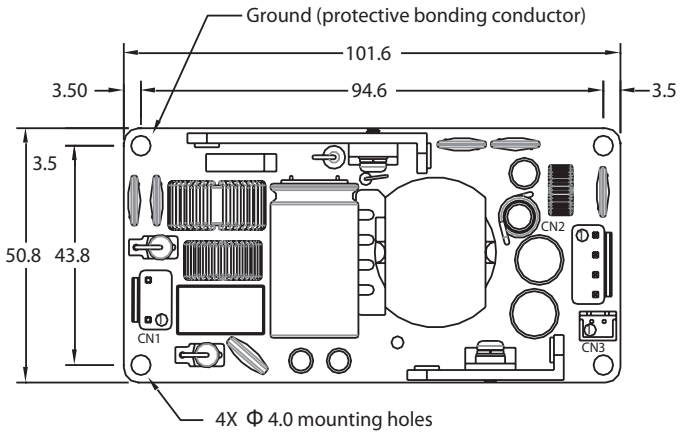

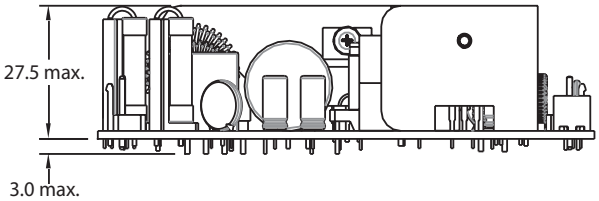

Model Selector

Model	Output (V)	Maximum Output (A)	Maximum Power (W)	Ripple and Noise Full Load (mV)	Ripple and Noise <30% Load (mV) (1)
CSS65A-5	5	8.0	40	100	200
CSS65A-12	12	5.42	65	120	200
CSS65A-15	15	4.34	65	120	300
CSS65A-19	19	3.43	65	120	300
CSS65A-24	24	2.71	65	200	300
CSS65A-28	28	2.33	65	200	350
CSS65A-48	48	1.36	65	200	480
CSS65A-54	54	1.21	65	200	480

Notes: (1) Ripple level increases at light loading to meet new efficiency standards

Options

Suffix	Description
Blank	Molex Input and Output Connectors
/J	JST Input and Output Connectors

TDK-Lambda France SAS
3 Avenue du Canada
Parc Technopolis
Bâtiment Sigma
91940 les Ulis
France
Tel: +33 1 60 12 71 65
Fax: +33 1 60 12 71 66
france@fr.tdk-lambda.com
www.fr.tdk-lambda.com

Italy Sales Office
Via dei Lavoratori 128/130
20092 Cinisello Balsamo (MI)
Italy
Tel: +39 02 61 29 38 63
Fax: +39 02 61 29 09 00
info.italia@it.tdk-lambda.com
www.it.tdk-lambda.com

Netherlands
info@nl.tdk-lambda.com
www.nl.tdk-lambda.com

TDK-Lambda Germany GmbH
Karl-Bold-Strasse 40
77855 Achern
Germany
Tel: +49 7841 666 0
Fax: +49 7841 5000
info.germany@de.tdk-lambda.com
www.de.tdk-lambda.com

Austria Sales Office
Aredstrasse 22
2544 Leobersdorf
Austria
Tel: +43 2256 655 84
Fax: +43 2256 645 12
info@at.tdk-lambda.com
www.de.tdk-lambda.com

Switzerland Sales Office
Bahnhofstrasse 50
8305 Dietlikon
Switzerland
Tel: +41 44 850 53 53
Fax: +41 44 850 53 50
info@ch.tdk-lambda.com
www.de.tdk-lambda.com

Nordic Sales Office
Haderslevvej 36B
DK-6000 Kolding
Denmark
Tel: +45 2911 9556
info@dk.tdk-lambda.com

TDK-Lambda UK Ltd.
Kingsley Avenue
Ilfracombe
Devon EX34 8ES
United Kingdom
Tel: +44 (0) 12 71 85 66 66
Fax: +44 (0) 12 71 86 48 94
powersolutions@uk.tdk-lambda.com
www.uk.tdk-lambda.com

TDK-Lambda Ltd.
Kibbutz
Givat Hashlosha 48800
Israel
Tel: +9 723 902 4333
Fax: +9 723 902 4777
info@tdk-lambda.co.il
www.tdk-lambda.co.il

C.I.S.
Commercial Support:
Tel: +7 (495) 665 2627
Technical Support:
Tel: +7 (812) 658 0463
info@tdk-lambda.ru
www.tdk-lambda.ru

Local Distribution

www.emea.tdk-lambda.com