smartek vision

Made in EU

Datasheet
Giganetix Plus Camera

GCP2751M
GCP2751C

SMARTEK Vision
Business Class Products at Economy Prices

The Giganetix Plus series constitutes the technological flagship of our Industrial GigE Vision Camera portfolio. It is designed for industrial imaging applications which benefit from Sony's latest advances in CCD and CMOS imaging sensors, like the EXview HAD CCD II™ technology and the world's first Exmor™ CMOS sensor with a global shutter.
All new new sensors with two, three, six, nine and twelve megapixels show unbeaten light sensitivity. Thanks to our long-standing experience of camera design, the Giganetix Plus series offers optimal low noise performance in applications with very short exposure times, e.g. in high-speed automation. In outdoor surveillance and border control applications, the high NIR sensitivity and resolution of our cameras allow for new system designs and higher performance.
Besides the fine selection of image sensors and the superior picture quality, the Giganetix Plus cameras provide a rich feature set comprising Power over Ethernet (PoE), two input and output control channels plus a robust and compact enclosure of 50x50x48mm.
The fully GigE Vision compliant hardware and driver interface, the comprehensive Windows and Linux compatible Giganetix GigEVisionSDK as well as the utilization of industrial connectivity standards ensure the seamless integration also in existing cost-sensitive systems – without any compromise in quality!

Key Benefits & Features:

- Four Sony high-end 4-tap CCD sensor models from 2.8 MP up to 12 MP
- Sony's brand new global shutter CMOS sensor with the established Exmor™ technology
- Factory-calibrated taps on all multi-tap models
- Power over Ethernet (PoE)
- Heat optimized footprint with 50x50x48mm
- Exposure time programmable from 10µs to 10s
- Trigger latency of just ~2µs, jitter <0.5µs
- Fully GigE Vision and Gen<i>Cam compliant hardware and software
- Comprehensive C/C++ SDK, Windows and Linux
- Plug & Play, attach the camera to your Ethernet network and start working
- Standard C-Mount lens adapter
- Precise mount to image sensor alignment
- Sealed image sensor
- 2 inputs and 2 outputs, opto-isolated
- 3 years warranty

GigE VISION GEN<i>CAM

© SMARTEK d.o.o. 2014, information is subject to change without prior notice, Version 1.0.6 from 2014-04-24

Specifications:

Model	GCP2751M / GCP2751C
Sensor type	Sony ICX694
Sensor technology	Progressive Scan CCD / 4 Tap
Shutter type	Global Shutter
Resolution	2752x2208 (6.1 MP)
Frame rate (full resolution)	18 fps
Sensor size	1"
Pixel size	4.54x4.54 µm
Exposure time	10 µs - 10 s
Analog gain	12 - 24 dB
ADC bitdepth	8 / 14 bits
Power consumption (PoE)	ca. 4.0 W (4.8 W)

The platform concept of this camera series and its powerful on-board FPGA allows for flexible, fast, and cost-efficient customization of the mechanics, electronics, and the embedded camera software tailored to customer needs – also for low quantities.

Spectral sensitivity:

GCP2751M (Monochrome):

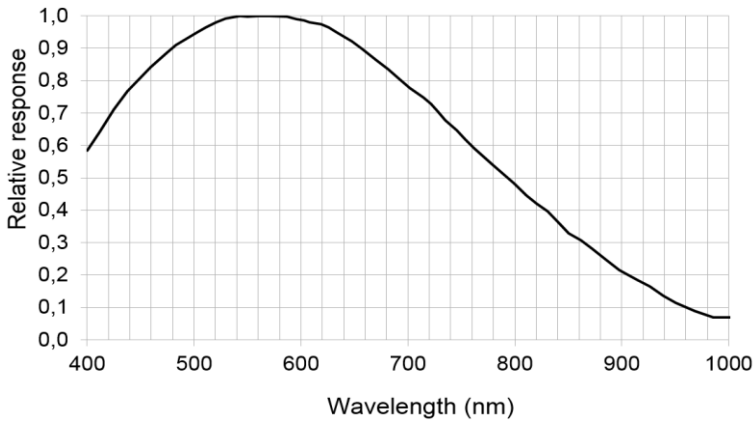

GCP2751C (Color):

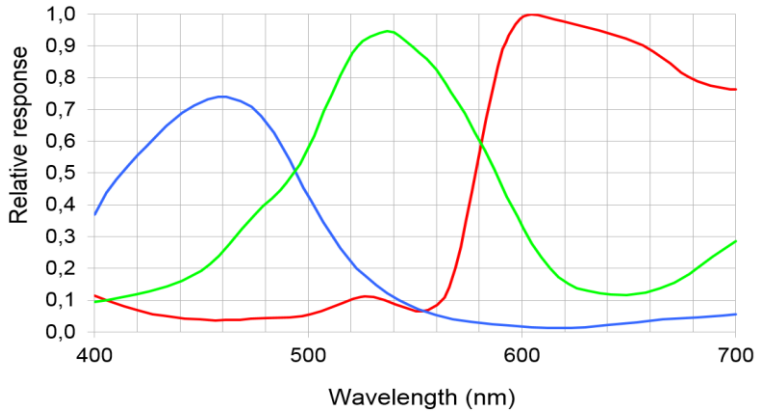

Further Specifications:

Video interface:	Gigabit Ethernet 1000BASE-T
Video format:	Mono 8/16, Bayer 8/16
Synchronization:	Via external trigger, single shot or free run
Exposure control:	Freely programmable via GigE Vision interface
Optical filters:	IR-cut default for color models
Digital input:	2 input channels, opto-isolated
Digital output:	2 output channels, opto-isolated
Power supply:	10-24V DC (via GPIO) or Power over Ethernet (PoE)
Mount:	C-Mount
Operating temp.:	from 0°C/+32°F up to +50°C/+122°F
Dimensions:	50x50x48mm
Weight:	ca. 150g

Software Environment:

Firmware update:	via Ethernet
Client software:	SMARTEK Vision GigEVisionClient Camera stream display and image capturing, intuitive graphical user interface for the adjustment of all available settings, GigE Vision and Gen<i>Cam compliant
Driver:	GigE Vision compliant Giganetix IP filter driver for all Windows™ and Linux platforms
SDK:	SMARTEK Vision GigEVisionSDK with documented API, freely applicable for most GigE Vision compliant cameras
Interoperability:	Validated with Halcon™, VisionPro™, Matrox Imaging Library™, LabView™, Scorpion Vision™ and others

Ordering Information:

GCP<XXX><N><Y>-<G>

- **G**
  - **IRC** with IR-cut filter (default for color models)
  - **CLG** clear glass (default for monochrome models)
- **Y**
  - **M** monochrome
  - **C** color
- **N** Model index
- **XXX** Horizontal resolution without last digit

Accessories (sold separately):

Our team assists you in finding the optimal accessories (lenses etc.) for your camera.

Cabling:	Standard I/O cables with flying leads and end ferrules Ethernet CAT5e/6 with straight RJ45 plugs and screw lock All cables are also available with angled plugs and in chain / hi-flex versions
Power supply:	12V wall mount power supply
Strobe controller:	SMARTEK Vision IP Strobe Controller with 1, 2 and 4 channels (up to 200V@20A)
Mounting plates:	Tripod mount adapter for standard 1/4" tripod mounts

SMARTEK Vision · Bana Josipa Jelacica 22c · HR-40000 Cakovec · Croatia
Tel.: ++49 (89) 381 5330 55 · Fax: ++385 (40) 493 819 · info@SMARTEKvision.com · **www.SMARTEKvision.com**

General Purpose IO Interface (GPIO):

EIAJ (Hirose compatible) 12 pin

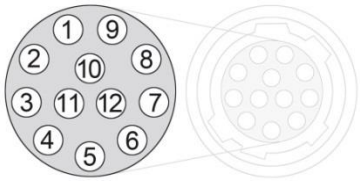

1 – Power GND
2 – 10-24V DC input
3 – Output 1 -
4 – Output 1 +
5 – Input 2 -
6 – Input 2 +
7 – Input 1 +
8 – Input 1 -
9 – Output 2 -
10 – Output 2 +
11 – Input 1 +
12 – Input 1 -

Dimensions in mm / [inch]:

Housing (without mount and plugs): 50x50x48mm

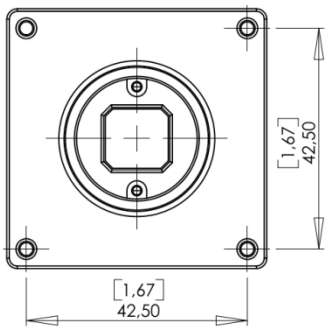

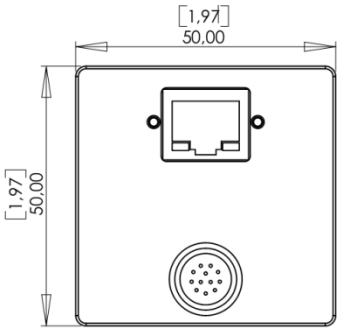

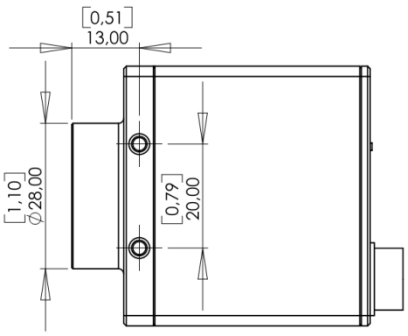

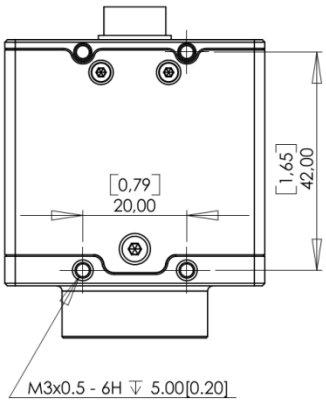

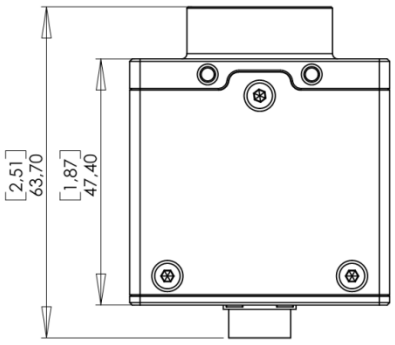

SMARTEK Vision · Bana Josipa Jelacica 22c · HR-40000 Cakovec · Croatia
Tel.: ++49 (89) 381 5330 55 · Fax: ++385 (40) 493 819 · info@SMARTEKvision.com · **www.SMARTEKvision.com**