AMC124 PRODUCT SHEET

Quad-Core Intel® XEON LC5528/LC5518 Processor for MONTEREY Platforms

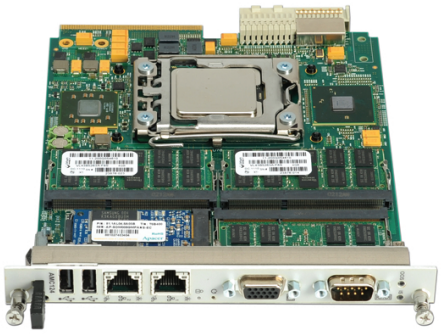

FEATURES

Quad-Core Intel® XEON LC5528/ LC5518 Processor: 64-Bit, 1.73GHz/ 2.13GHz, 8 Threads

Mid-Size, Double, High-Performance Computing AdvancedMC Module

Designed for the MONTEREY 8000™ Platform with MicroTCA Rear Transition Module Options

Up to 48GB PC1067 DDR3 Memory with ECC (128-Bit Addressability)

Dual 10GbE Fat-Pipes Support

On-board miniSATA II Drive Option

Intel®BD3420 Platform Controller Hub (PCH)

MicroTCA Rear Transition Module Support with XMC/PMC Expansion Port & HDD/SSD option

Supports Both 32- and 64-Bit Operating Systems:

- NexusWare® CGL OS and Development Environment
- Linux® x64
- Windows® XP x64
- Solaris™ 9/ 10 x64

Full Compliance with MicroTCA.4, AMC.0 R2.0, AMC.1 R1.0, AMC.2 R1.0, AMC.3 R1.0 Specifications

The AMC124, based on the 64-bit Quad-Core Intel® XEON LC5528/LC5518 processor, is designed to run very high performance applications that require multi-threaded operations, large amounts of memory, and/ or storage access. As a major component of the MONTEREY MicroTCA product family, the AMC124 provides a highly scalable x86 architecture with Intel® Hyper-Threading Technology capable of running eight threads. Designed to run Linux®, Solaris™, and Windows® applications, the quad-Core processor is ideal for high-end packet processing or multithreaded software services for demanding Aggregation Layer applications designed for central offices, data centers, wireless infrastructure, aerospace and defense applications. Example applications include multimedia gateways, communication systems, security systems, IP-based and IMS-based services, or wireless gateways.

Paired with the MONTEREY 8000 Enhanced MicroTCA.4 system, the AMC124 can take advantage of the RMC110 MicroTCA Rear Transition Module (µRTM) for serviceability of front boards while cabling stays fixed in the rear. This is critical in many Central Office deployments. For edge type applications, the AMC124 can also function in 1U MicroTCA® systems, such as the AMP5071.

Processor/Chipset/Memory Features

The AMC124 processor and chipset have been carefully selected for longevity from Intel's embedded products roadmap. This ensures that the AMC124 will be available for a number of years.

The AMC124 features the Intel® Xeon™ processor C5500/C3500 Series running at 1.73GHz or 2.13GHz clock speed and can scale up to a total of 48Gbytes of DDR3 with ECC memory capacity via the PC3-8500 DDR3-1067 533 MHz dual-channel memory controller interface. MONTEREY 8000's architecture provides sufficient power to drive the higher speed 2.13GHz processor. The Intel Xeon processor is a high performance, low power, 64-bit processor that is compatible with 32-bit applications, enabling a single architecture across 32- and 64-bit environments. It featuresIntel's proprietary Hyper-Threading Technology to maximize computations on each core. The operating system can address two virtual processors per core, and shares the workload between them when possible. Thus, a quadcore processor can effectively run as eight cores. The Intel 3420 chipset provides the necessary I/O and peripheral support, including USB 2.0, serial, six SATA channels, and PCI Express®.

Design Flexibility

The ability to design and produce our own hardware platforms, coupled with expertise in providing innovative software, enables us to produce high-performance, scalable, and flexible Application-Ready offerings. It allows system designers to build robust, highly-reliable solutions that combine state-of-the-art computing performance, platform management, and integrated switching.All of these solutions are compliant with the MicroTCA and AdvancedMC specifications, which assures interoperability, broad vendor selection, and a range of choices to complement the AMC124.

WWW.PT.COM

Pre-Integrated Software Options

Equipment manufacturers and providers can immediately begin development of their application on receipt of MONTEREY 8000 Platforms featuring the AMC124 processor, eliminating the time and costs normally associated with integrating, troubleshooting, and configuring building blocks from one or more vendors.

PT integrates an operating system, drivers, APIs, and other value-added software options.

- **NexusWare® Core** is a complete Carrier Grade Linux® (CGL) distribution, with web-based management, GUI-based IDE, and Image Builder
- **NexusWare SIP** is an installable Session Initiation Protocol (SIP) stack and API software package
- **NexusWare C7** is a comprehensive SS7 MTP-2 installable software package
- **NexusWare WAN** protocols provides a wide range of WAN protocols
- **Xpress™ SIP Services** provides the service creation and service deployment products that carriers need to rapidly build and deploy SIP-based services.

Flexible I/O Support

Base Fabric: The AMC124 provides four on-board 1Gb Ethernet channels; two connections to the Common Options Region of the midplane (ports 0 & 1) and two GbE ports to the front panel.

Fat-Pipes Fabric: The AMC124 can be ordered with support for either 10GbE Ethernet or PCI-Express:

- **Dual 10GbE Ethernet:** This option provides dual 10GbE Ethernet channels to the Fat-Pipes Region of the midplane (ports 4-7 and 8-11). The 10 Gigabit Ethernet controller along with Intel® Xeon® processor 5500 series-based servers deliver unmatched performance scalability that signals a new paradigm in the Central Office and Data Center – a paradigm of intelligent solutions that help manage growth while controlling costs; a paradigm of advanced virtualization features; and a paradigm of a simple, cost-effective, unified network. The Intel® Virtualization Technology for Connectivity (Intel VT-c), included in the LC5528/LC5518 processor, delivers outstanding hardware assisted virtualization for performance in server environments. VT-c is a collection of I/O virtualization techniques that enable lower CPU utilization, reduced system latency, and improve networking throughput. This hardware optimization help to reduce I/O bottlenecks and improve the overall server performance. In addition, the 10 Gigabit Ethernet controller combines LAN and SAN traffic onto a single Ethernet fabric, reducing cost and complexity of the data center. iSCSI, NAS or FCoE can be utilized to carry storage traffic over Ethernet. The controller utilizes enhanced transmission selecting and priority flow control to meet SAN requirements for guaranteed packet delivery. The controller accelerates iSCSI traffic by implementing key stateless offloads such as TCP segmentation offload (TSO) and Receive Side Coalescing (RSC).

- **PCI-Express: The AMC124** is user-configurable to support x8 PCI-Express on ports 4-11, or to support dual x4 PCI-Express links on ports 4-7 and 8-11. Both Gen1 or Gen2 speeds are supported.

Storage

There are numerous storage options with the AMC124. With the capability to attach up to four standard drives and one mini SATA drive to a single processor, storage-intensive applications can take advantage of this flexible architecture. For example, four 500 GB HDD's can be configured to provide 2 Terabytes of capacity. This makes the AMC124 an ideal embedded database server, with the capability to support RAID, for applications such as number portability, home/virtual location register, or home subscriber server.

- **On-Board Storage:** The AMC124 supports an on-board mini SATA (mSATA) drive bay. Typical capacities today range from 32GB, 64GB and 128GB. See configuration options below for ordering information.
- **µRTM Storage:** The RMC110 µRTM can support up to two Hard Disk Drives (HDD) or Solid State Drives (SSD). See configuration options below for ordering information.
- **Adjacent AMC Storage Modules:** Up to two AMC590 storage modules can be configured next to one AMC124 in the MONTEREY 8000 Platform.

Front Panel IO

The AMC124 provides the following ports and LEDs on the front panel:

- Dual 1GbE ports (RJ-45)
- Dual USB 2.0 ports
- Serial port (DB9)
- In-Service, Out-of-Service, and Hot-Swap LEDs

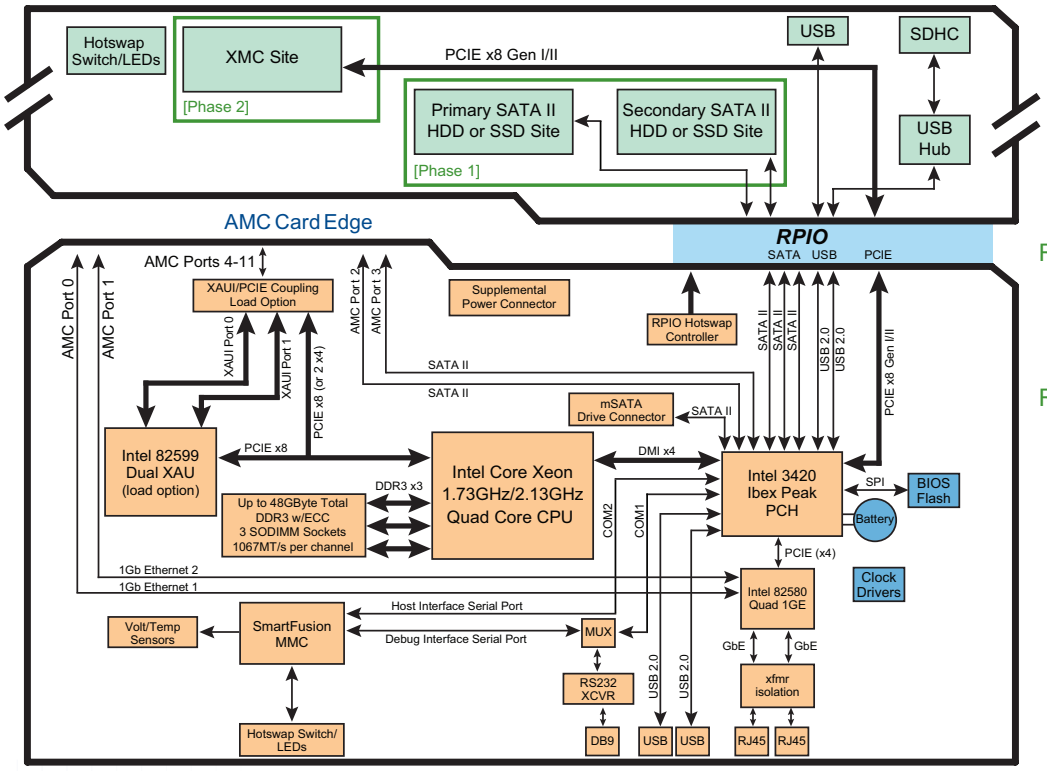

RTM Phase 1:
- Dual SATA II HDD or SSD Sites
- USB
- SD Flash Site

RTM Phase 2:
- XMC Site
- USB 2.0 Port
- SD Flash Site

Block Diagram of the AMC124 and RMC110 µRTM

MicroTCA Rear Transition Module IO

The RMC110 MicroTCA Rear Transition Module has two phases and offers support for the following ports on the rear panel:
Phase 1
- Dual SATA II HD or SSD Sites
- USB 2.0 port
- SDHC Flash Site: accessible from the panel Phase 2
- XMC Site
- USB 2.0 port
- SDHC Flash Site: accessible from the panel

The XMC slot connects to the AMC124 via an x8 PCI-Express interface on the µRTM connector. Third-party vendors provide a variety of XMC cards, such as quad 1GbE, dual 10GbE with SFP+ connectors, or high-performance 3D video, DSP processing, and other high performance functions.

Thermal Design for Embedded Applications

The AMC124 is designed to fit into the power and cooling capabilities of PT's Advanced Managed Platform™ solution, so customers can be assured that their applications will meet stringent requirements that include NEBS, UL, and ETSI. It is also designed from the ground up to be 6of6 RoHS-compliant for systems that require toxic materials elimination. By employing advanced techniques that include the use of the onboard IPMC microcontroller to control CPU clock speed, PT has designed the AMC124 to automatically adjust to the most demanding environmental conditions.

Ordering Options for the AMC124

Product Number	Description
PT-AMC124-12543	DW, Mid, MTCA.4, 2.13GHz Quad Core Xeon, 12GB DDR3, dual 10GbE, µRTM support
PT-AMC124-12544	DW, Mid, MTCA.0, 1.73GHz Quad Core Xeon, 12GB DDR3, x8 PCIe Fat Pipes, no µRTM support
PT-AMC124-12545	DW, Mid, MTCA.4, 1.73GHz Quad Core Xeon, 12GB DDR3, x8 PCIe Fat Pipes, µRTM support
PT-RMC110-12586	DW, Mid, MTCA.4, µRTM, 250GB HDD, SD site (8GB, 16GB, 32GB SD's available)

AMC124 PRODUCT SHEET

Technical Specifications

ORDERING INFORMATION

To discuss specific requirements and/or pricing, contact sales@pt.com

PICMG® Specifications
- Full Compliance with MicroTCA.4, MicroTCA.0, AMC.0, AMC.2, AMC.3, AMC.4
- Double-wide, Mid AMC

AdvancedMC™ Connector Ports
- Port 0: 1 Gb Ethernet Channel 1 (AMC.2)
- Port 1: 1 Gb Ethernet Channel 2 (AMC.2)
- Port 2: SATA 1 (AMC.3)
- Port 3: SATA 2 (AMC.3)
- Ports 4-11:
  Option 1: Dual 10GbE (AMC.2)
  Option 2: x8 PCI Express (AMC.1) or dual x4 PCI Express

Processor
- 1.73/2.13 GHz Quad-Core Intel® Xeon™ processor C5500 architecture:
  - 32 KB Level 1 instruction cache (per core)
  - 32 KB Level 1 data cache (per core)
  - 256KB shared, instruction/data L2 cache with ECC for each core
- Up to 8 MB Level 3 shared data/instruction cache with ECC shared among all processor cores
- Intel 64-bit architecture
- Compatible with existing 32-bit code base
- Intel Virtualization Technology (Intel VT) for directed I/O (Intel VT-d2)
  - Crystal Beach
  - Intel Streaming SIMD Extensions 4.1 (Intel SSE4.1)
  - Intel Streaming SIMD Extensions 4.2 (Intel SSE4.2)
  - Intel Simultaneous Multi-Threading
- Hyper-Threading Technology uses processor resources more efficiently, enabling multiple threads to run on each core
- Intel 3420 "Ibex Peak" IMCH

Memory
- Supports up to 48 GB DRAM
- Low latency, high bandwidth
- PC3-8500 DDR3-1067 533 MHz three channel memory controller interface
- 204-pin SO-RDIMM
- ECC checking with double-bit detect and single bit correct

Front Panel Interfaces
- Dual 1GbE ports (RJ-45)
- Dual USB 2.0 ports
- Serial port (DB9)
- In-Service, Out-of-Service, and Hot-Swap LEDs

Storage
- On-board miniSATA
- Up to two HDD's or SSD's on µRTM (PT-RMC110)
- Up to two adjacent Storage AMC's (PT-AMC590)

µRTM Options
Phase 1
- Dual SATA II HDD or SSD Sites
- USB 2.0 port
- SD Flash Site

Phase 2
- XMC Site
- USB 2.0 port
- SD Flash Site

Board Management
- CLI via RS-232 and in-band Ethernet ports
- Telnet
- SNMP v1, v2c, v3 – RFC 1157
- MIBs
  - MIBII – RFC 1213, MIBII bridge – RFC 1493
  - IEEE 802.1q MIB – RFC 2674
  - PT enterprise MIB

Mechanical
- Mid-size, Double AMC.0 form factor
- Dimensions: 147 mm (W) x 180.6 mm (D) x 18.96 mm (H) (5.8 in x 7.1 in x 0.75 in)
- Weight: 1.08 kg (2.39 lb)

Power Consumption
- Payload Power: +12 V
- Management Power: +3.3 V

1.73GHz Processor
- Typical: 74W @ 12V DC
- Maximum: 80W @ 12V DC

2.13 GHz Processor
- Typical: 89W @ 12V DC
- Maximum: 105W @ 12V DC

RMC110 w/Single HDD
- Typical: TBD W
- Maximum: TBD W

Environmental
- Operating: 0 to 55°C (32 to 131°F)
- Non-operating: -20 to 80°C (-4 to 176°F)
- Humidity: 5 to 90% RH non-condensing

Agency Certifications (Pending)
- FCC Class A
- CE
- UL 60950
- EN 60950
- EN 300 386
- Designed to meet NEBS Level 3

MTBF (hours per Bellcore SR-332 Issue 1)

Model No.	Calculated
PT-AMC124-12543	272,534
PT-AMC124-12544	242,930
PT-AMC124-12545	241,627

CONTACT US

www.pt.com

E-mail: sales@pt.com

WWW.PT.COM

© 2012 Performance Technologies, Inc. All Rights Reserved. PT is a trademark of Performance Technologies, Inc. The names of actual companies, products, or services may be the trademarks, registered trademarks, or service marks of their respective owners in the United States and/or other countries. PS/1012