AMC121 PRODUCT SHEET

Intel® Core™ 2 Duo Processor AdvancedMC™ Module

FEATURES

Intel Core 2 Duo Featuring a 64-Bit Dual-Core 1.5 GHz Processor

Mid-Size, Single Compute Module

High-Performance Computing Solution for AdvancedTCA and MicroTCA Systems

MiniSD™ Site for Onboard Program and OS Storage

4 MB Shared L2 Cache

64-Bit Memory Addressability up to 4 GB, PC2-3200 DDR2 with ECC

TCP/IP Offload (TOE), iSCSI, RDMA, on Ethernet Channels

Full Compliance with AMC.0 R2.0, AMC.1 R1.0, AMC.2 R1.0 Specifications

Supports Both 32- and 64-Bit Operating Systems:
- NexusWare CGL OS and Development Environment
- Linux
- Windows XP
- Solaris 9/10

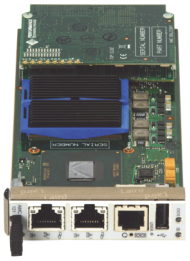

The AMC121 is a 64-bit AdvancedMC™ (AMC) single board compute module with the Intel Core 2 Duo processor, which features a dual-core 1.5 GHz processor and is designed for high-performance embedded applications. The AMC121 provides equipment manufacturers with the ability to extend and tailor the performance of their AdvancedTCA® and MicroTCA® systems to meet the increasing need for cost-effective and modular processing capabilities.

The Intel Core 2 Duo processor provides a highly scalable x86 architecture that delivers next-generation performance and a flexible upgrade path from 32- to 64-bit computing. Its dual-core architecture offers advanced processing speed while addressing the power and heat constraints of the AMC form factor. Designed to run Linux®, Solaris™, and Windows®-based applications, the AMC121 is the ideal processor for the high-end packet processing or multi-threaded software applications found in IMS, wireless, softswitch, defense, or any other compute-intensive application.

Hardware Features

The AMC121 features the Intel Core 2 Duo processor that supports dual-core operation with up to 4 GB DDR2 with ECC memory for unparalleled performance. The CPU is linked to the Intel 3100 embedded chipset via a 667 MHz front side bus. The 3100 supports two SATA interfaces and eight-lane PCI Express® to the AMC card edge connector. The AMC interface also includes dual 1 GB/2.5 Gb Ethernet ports with support for TCP/IP Offload Engine (TOE), iSCSI, and Remote Direct Memory Access (RDMA). Connectivity on the front panel includes dual 1 Gb Ethernet ports, USB 2.0, and a serial console port.

Flexible I/O and Super Computer Performance

The AMC121 is designed for use in AdvancedTCA carriers or MicroTCA chassis, and allows system designers to build NEBS-complaint, highly reliable solutions that combine state-of-the-art management with the highest performance power and cooling. A clustered computing architecture built with the AMC121 and a standards-compliant Advanced Managed Platform™ offering can outperform proprietary blade server architectures from both a computing-density-per-rack and a total-cost-of-ownership perspective.

NexusWare® Software Support

The AMC121 features support for PT's Linux OS and development environment. NexusWare is an integrated, CGL Registered, and POSIX-compliant Linux OS and development environment that features a graphically integrated toolset.

AMC121 PRODUCT SHEET

Technical Specifications

ORDERING INFORMATION

PT-AMC121-12208
Dual-Core, X.86, 64-bit, 1.5 GHz, 2 GB DDR

PT-AMC121-12280
Dual-Core, X.86, 64-bit, 1.5 GHz, 4 GB DDR

PT-MSD4G-12293
MiniSD™ Module, 4 GB, Class 6

PT-MSD8G-12397
MiniSD Module, 8 GB, Class 6

PT-ACC358-12275
RS232 Debug Cable (console)

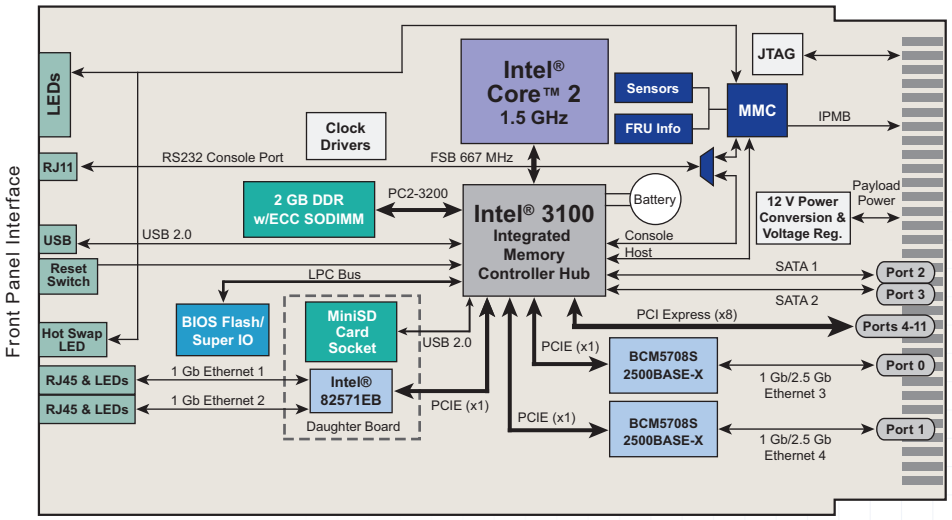

AMC121 – Mid-Size, Single Compute Module

Processor

- Intel® Core™ 2 dual-core architecture:
  - Independent L1 cache structures per core
  - Shared L2 cache (4 MB)
  - 64-bit processor
- Compatible with existing 32-bit code base
- Enhanced Intel SpeedStep® technology for more efficient power management

Memory

- Low latency, high bandwidth
- 64-bit DDR2 PC2-3200
- 200-pin SO-RDIMM
- Supports up to 4 GB DRAM
- ECC checking with double-bit detect and single-bit correct

Storage

- Onboard MiniSD card site with program and operating system storage space enables the module to boot without an external connection
- Compatible with AMC590 video and storage AdvancedMC™ Module

Front Panel Interfaces

- 2 x 10/100/1000 Ethernet Ports
- One USB 2.0 Port
- Serial Port
- LEDs
  - In-Service
  - Out-of-Service
  - Hot-Swap
  - User-Defined LED
- Reset Switch

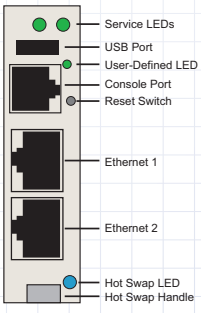

AdvancedMC Connector Ports

- Port 0: 1 Gb/2.5 Gb Ethernet Channel 1 (AMC.2)
- Port 1: 1 Gb/2.5 Gb Ethernet Channel 2 (AMC.2)
- Port 2: SATA 1 (AMC.3)
- Port 3: SATA 2 (AMC.3)
- Ports 4-11: x8 PCI Express® Lanes (AMC.1)
  - x1, x4, or x8

Power Consumption

- Payload Power: +12 V
- Management Power: +3.3 V
- Typical: 35 W
- Maximum: 40 W

Mechanical

- Mid-size, single AMC.0 form factor
- Dimensions: 73.5 mm (W) x 180.6 mm (D) x 18.96 mm (H) (2.9 in x 7.1 in x 0.75 in)
- Weight: 0.25 kg (0.55 lb)

Environmental

- Operating: 0 to 55°C (32 to 131°F)
- Non-operating: -20 to 80°C (-4 to 176°F)
- Humidity: 5 to 90% RH non-condensing

Agency Certifications

- FCC Class A
- CE
- UL 60950
- EN 60950
- EN 300 386
- Designed to meet NEBS Level 3

MTBF

- 653,948 hours per Bellcore SR-332 Issue 1

CONTACT US

www.pt.com
E-mail: sales@pt.com

© 2012 Performance Technologies, Inc. All rights reserved. Specifications subject to change without notice. The names of actual companies, products, or services may be the trademarks, registered trademarks, or service marks of their respective owners in the United States and other countries.

PS/1210