AMC131 PRODUCT SHEET

MPC8641D Processor AdvancedMC™ Module

FEATURES

Freescale™ Dual-Core 1 GHz MPC8641D PowerPC® Processor

Mid-Size, Single Compute Module

High-Performance Computing Solution for AdvancedTCA® and MicroTCA® Systems

PCI-Express® and Serial RapidIO® Options

MiniSD™ Site for Onboard Program and OS Storage

32-Bit Memory Addressability, Dual Channel, 2 GB PC2-3200 DDR2 SDRAM with ECC

Four 1 Gb Ethernet Interfaces

Full Compliance with AMC.0 R2.0, AMC.1 R1.0, AMC.2 R1.0, and AMC.4 Type 5 Specifications

Supports Both 32- and 64-Bit Operating Systems:
- NexusWare® CGL OS and Development Environment
- Linux®

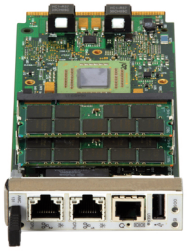

The AMC131 is a 32-bit AdvancedMC™ (AMC) compute module that features the Freescale™ MPC8641D dual-core 1 GHz PowerPC® processor and is designed for high-performance embedded applications. As a compute module option for PT's IPnexus® Application-Ready Systems, which tightly integrates a MicroTCA®-based platform, other configurable AMC modules, and the NexusWare® family of Linux® software products, it meets the needs for cost-effective and modular processing in a low-profile, appliance-style form factor for multi-threaded software applications found in telecom, wireless, as well as aerospace and defense applications.

Hardware Features

The AMC131 is built around a dual-core 1 GHz MPC8641D PowerPC® processor. Versions up to 1.33 GHz are available. This device offers a highly cost-effective, network-optimized approach to performing packet processing and general computing tasks. The AMC interfaces include dual 1 Gb Ethernet ports, and three high speed fabric options:

1. x8 PCI Express®
2. 4x Serial Rapid IO®
3. x4 PCI Express and 4x Serial RapidIO

The AMC131 can be configured with up to 2 GB of DRAM and 128 MB of boot Flash so it can operate as an independent processing element, and it features a miniSD™ card for global storage. It features a real-time clock (RTC) with battery backup, and mid-size face plate.

Flexible I/O and Super Computer Performance

The AMC131 is designed for use in AdvancedTCA® carriers or in a MicroTCA® chassis, and allows system designers to build NEBS-compliant, highly reliable solutions that combine state-of-the-art management with the highest performance power and cooling.

IPnexus Application-Ready Systems

PT's IPnexus Application-Ready Systems offer a highly integrated and comprehensive COTS-based hardware and software solution to rapidly develop and deploy value-added capabilities to embedded applications. Developers can immediately begin development of their application on receipt of these systems, eliminating the time and costs normally associated with integrating, troubleshooting, and configuring building blocks from one or more vendors. Application-Ready Systems come integrated with PT's NexusWare Linux Operating system, drivers, APIs, and other value-added software options.

AMC131 PRODUCT SHEET

Technical Specifications

ORDERING INFORMATION

PT-AMC131-12115
Processor AMC, Dual Core 8641D PPC, x8 PCIe, 1.0 GHz, 2 GB DDR

PT-AMC131-12420
Processor AMC, Dual Core 8641D PPC, 4x SRIO, 1.0 GHz, 2 GB DDR

PT-AMC131-12423
Processor AMC, Dual Core 8641D PPC, x4 PCIe and 4x SRIO, 2 GB DDR

Contact PT for 1.25 GHz and 1.33 GHz 8641D options.

Software Options

PT's NexusWare® suite of software provides a comprehensive Carrier Grade Linux® (CGL) OS and development environment as well as middleware and protocol communications software.

For more information visit www.pt.com or call your local representative.

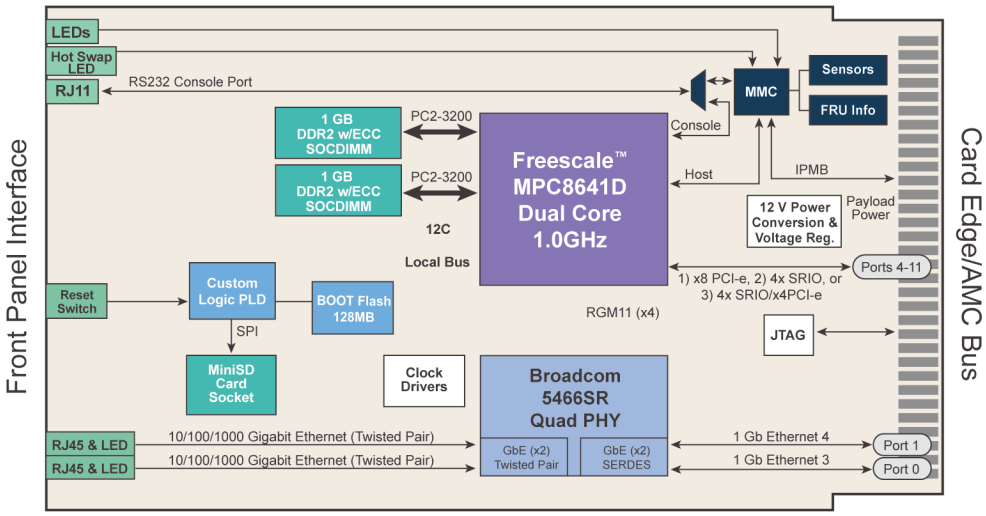

AMC 131 – Mid-Size Single Compute Module

Processor

- Freescale™ Dual-core 1.0 GHz MPC8641D PowerPC® processor
- 32 KB L1 instruction and data caches
- 1 MB L2 on-chip cache

Memory

- 2 GB ECC DDR2 SDRAM with ECC
- Dual PC2-3200 interfaces

Storage

- Onboard MiniSD card site with program and operating system storage space enables the module to boot without an external connection
- Shared 128 MB boot flash

Front Panel Interfaces

- 2 x 10/100/1000 base-T ethernet
- RJ11 RS232 console port
- LEDs
  - In-Service
  - Out-of-Service
  - Hot-Swap
  - User-Defined LED
  - Reset Switch

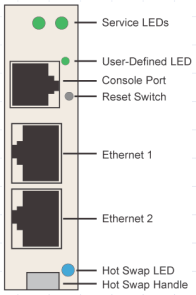

Power Consumption

- Payload power: +12 V
- Management power: +3.3 V
- Typical: 35 W
- Maximum: 40 W

AdvancedMC™ Connector Ports

- Port 0: 1 Gb ethernet (AMC.2)
- Port 1: 1 Gb ethernet (AMC.2)
- Three Fat Pipe Options
  a) Ports 4-11: x8 PCI Express® Lanes (AMC.1) x1, x2, x4, or x8
  b) Ports 4-7: 4x Serial RapidIO® (AMC.4)
  c) Ports 4-7: x4 PCI Express and Ports 8-11: 4x Serial RapidIO

Mechanical

- Mid-size, single AMC.0 form factor
- Dimensions: 73.5 mm (W) x 180.6 mm (D) (2.9 in. x 7.1 in.)
- Weight: 0.298 kg (0.66 lb)

Environmental

- Operating: 0 to 55°C (32 to 131°F)
- Non-operating: -20 to 80°C (-4 to 176°F)
- Humidity: 5% to 90% RH non-condensing

Agency Certifications (Pending)

- FCC Class A
- CE
- UL 60950
- EN 60950
- EN 300 386
- Designed to meet NEBS Level 3 and ETSI installations

MTBF

263,505 hours per Bellcore SR-332 Issue 1

CONTACT US

www.pt.com
E-mail: sales@pt.com

WWW.PT.COM

© 2012 Performance Technologies, Inc. All rights reserved. Specifications subject to change without notice. The names of actual companies, products, or services may be the trademarks, registered trademarks, or service marks of their respective owners in the United States and other countries.

PS/0711