AMC328 PRODUCT SHEET

Voice and Media Processor

FEATURES

Mid-Size, Single-Wide AMC Voice and Media Processor

Full Compliance with AMC Specifications

Centillium Communications Entropia™ III, VoIP System-on-Chip Processor

Freescale™ MPC8568 PowerQUICC® III Processor

PCI Express® (AMC.1) and Gigabit Ethernet (AMC.2) Connectivity

Telco Clock Support for TCLKA, TCLKB, and TCLKC

NexusWare® Core CGL Distribution and Development Tools

NexusWare SIP Session Initiation Protocol (SIP) Stack and API

NexusWare WAN Protocol Software:
- HDLC
- X.25
- Frame Relay

NexusWare C7 SS7 MTP-2

Broad Operating System Support includes Solaris™, Windows®, and Linux®



The use of MicroTCA® and AdvancedTCA® systems for telecommunications, aerospace, and defense will require high-density, highly advanced I/O solutions for use in these form factors.

In addition, the continuous challenge of finding new ways to cost-effectively provide optimized solutions for network communication systems is paramount. PT understands these challenges and has designed the industries first mid-size AMC module that combines both high-end voice and media processing technologies along with T1/E1/J1 interfaces. This enables design engineers to provide TDM functions with voice and media processing that supports wireline and wireless codecs that is both more efficient for their system design, and cost-effective for their budgets.

The AMC328 AdvancedMC™ voice and media controller addresses the need for a comprehensive high-capacity connectivity solution for use with AdvancedTCA or MicroTCA platforms. Providing 8 ports of T1/E1/J1 connectivity with voice and media processing in a single-wide mid-size AMC form factor allows customers to maximize slot usage and create powerfully dense solutions in small form factors such as MicroTCA platforms offered by PT. In addition, the AMC328 is supported with PT's extensive NexusWare® software suite providing developers and architects the ability to deliver a wide range of Voice-over-IP, Wireless, and IP Multi-Media Subsystem (IMS) infrastructure solutions.

Hardware Features

The AMC328 maximizes T1/E1/J1 with voice and media capability into a single-wide mid-size AMC module. The specialized architecture leverages the power of a Freescale™ MPC8568 Quad Integrated Communications Controller (PowerQUICC® III) and TranSwitch Entropia™ III, Voice-over-IP (VoIP) System-on-Chip (SoC) processor for voice and media to deliver high-performance and high-capacity processing. The AMC328 also provides eight T1/E1/J1 interfaces, support for high performance PCI Express® interfaces, and Gigabit Ethernet. The AMC328 module enables rapid exchange of payload information and represents the ideal solution for a wide range of applications requiring T1/E1/J1 connectivity and voice/media capability.

AMC328 PRODUCT SHEET

NexusWare® Software Support

NexusWare® is a family of Linux® software products that enable users of PT's broad range of COTS embedded hardware solutions to rapidly develop and deploy value-added capabilities with their solutions. This powerful combination of software and hardware enables system engineers, architects, and designers in telecommunications as well as aerospace and defense markets to create applications and bring to market solutions such as LTE, WiMAX, media gateways, managed WAN gateways, VoIP, lawful intercept, signaling gateways, and base station controllers.

The NexusWare family of products supported on the AMC328 includes:

NexusWare Core: At the very center of the NexusWare Software Suite is NexusWare Core. NexusWare Core is a complete Carrier Grade Linux® (CGL) distribution. In addition to being a Linux distribution, NexusWare Core also provides a complete set of development tools.

NexusWare SIP: NexusWare SIP is a Session Initiation Protocol (SIP) stack and API software package included with NexusWare Core that provides a powerful foundation for application developers for building SIP proxy servers, SIP location servers, SIP registrar servers, and SIP media gateways for wireless and IP telephony systems.

NexusWare WAN: NexusWare WAN protocols provides a wide range of WAN protocols which allows OEMs and System Integrators to create flexible and efficient radar gateways, converged serial gateways, and front-end I/O systems. NexusWare WAN software products are offered both as installable software packages for NexusWare Core and as turn-key packages for those developers interested in the protocol package by itself. Whether the installable or the turn-key solution is chosen, developers will be provided with a well-documented and powerful API to assist the development process.

NexusWare C7: NexusWare C7 is a comprehensive SS7 MTP-2 installable software package that provides a powerful foundation for building SS7 applications for wireless and IP telephony systems. NexusWare C7 provides extensive system scalability. The distributed processing architecture of NexusWare C7 allows the addition of SS7 links into existing equipment without compromising overall host system performance.

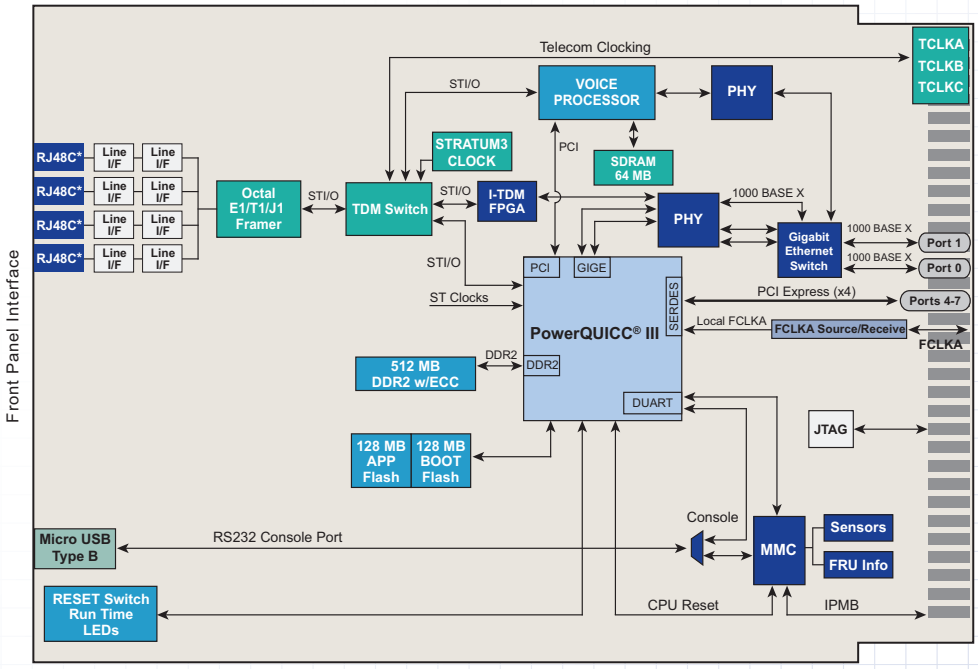

*Note: Each RJ48C carries two T1/E1/J1 interfaces

AMC328 – Mid-Size, Single-Wide AMC Module

General Specifications

Performance

- Eight individually software selectable T1/E1/J1 lines
- PCI Express® x4 link on AMC ports 4-7 (AMC.1 Type 4)
- 2 Gigabit Ethernet links on AMC port 0 and port 1
- Telecom clock support on TCLKA, TCLKB, and TCLKC
- PCI Express 100 MHz clock input on AMC FCLKA

Protocol Support

- MTP2 Link Layer
- Transparent (Voice Stream)
- HDLC
  - LAPD (Q.921), LAPB, LAPF
- X.25
- Frame Relay
- ATM (AAL0, AAL1, AAL2, AAL5)

Processor

- 1 GHz Freescale™ MPC8568 PowerQUICC® III

Memory

- 512 MB DDR2 SDRAM w/ECC
- 256 MB Flash memory

Front Panel Interfaces

- Front access on 4 RJ48C connectors*
- LEDs
  - Out-of-Service
  - In-Service
  - CPU
  - Hot-Swap
- Hot Swap Handle

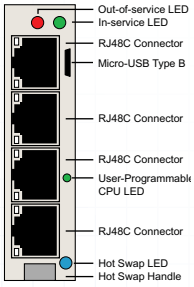

Telecom Clock Management

- Line interfaces configurable LT (slave) or NT (master) mode
- Three synchronization modes supported
  - Free-running Stratum 3 internal clock
  - Recovered clock from any T1/E1/J1 line
  - System telecom clock reference (via AMC TCLKA or TCLKC)
- Synchronized clock can be forwarded to AMC TCLKB with Stratum 3 hold-over capabilities

Power Consumption

- Payload power: +12 V
- Management power: +3.3 V
- Typical: 20W
- Maximum: 27.5W

Mechanical

- Mid-size, single AMC.0 form factor
- Dimensions: 73.5 mm (W) x 180.6 mm (D) (2.9 in. x 7.1 in.)

Environmental

- Operating: 0 to 55°C (32 to 131°F)
- Non-operating: -40 to 80°C (-40 to 176°F)
- Humidity: 5% to 95% non-condensing

Agency Certifications

- FCC Class A
- CE
- UL 60950
- EN 60950
- EN 300 386
- Designed to meet NEBS Level 3 and ETSI installations

MTBF

TBD

*Note: Each RJ48C carries two T1/E1/J1 interfaces.

AMC328 PRODUCT SHEET

Technical Specifications

ORDERING INFORMATION

PT-AMC328-12355
Voice and Media Processor

PT-ACC308-12387
T1/E1/J1 Splitter Cable

PT-ACC308-12388
RS232 Debug Cable (console)

Software Options

PT's NexusWare® suite of software provides a comprehensive Carrier Grade Linux® (CGL) OS and development environment as well as middleware and protocol communications software.

For more information visit www.pt.com or call your local representative.

Media Specifications

Port Capacity

- Up to 240 VoIP connections with 128ms echo canceller, tone relay, and tone gen/det functions
- Up to 120 TDM-to-TDM cross connections with 128ms echo canceller and tone gen/det functions
- Up to 504 IP-to-IP cross connections
- Up to 96 T.38 Fax Relay connections
- Up to 336 conference bridges

Voice Coding

- Wireline: G.711 w.Appendix I & II, G.726, G.723.1A, G.729A/B
- Wireless: AMR, EVRC, QCELP
- All codecs can be flexibly mixed

Echo Cancellation

- G.168-2002-compliant, up to 128 ms configurable tail lengths

In-Band Signaling

- DTMF, MF detection and generation, packet and TDM side
- Detection of fax and data modem tones
- Generation and detection of call progress tones
- Caller ID Type 1 and 2

Media Protocols

- RTP/RTCP per RFC 3550/3551
- DTMF over RTP per RFC 2833

Fax

- T.38 Internet Fax Protocol, Fax Class 2.0, G.711 pass-through

Media Server Capabilities

- Conferencing up to 642 participants
- Announcements, recording: local and host storage options
- Full support of Lawful Interception/CALEA requirements

Quality of Assurance

- VLAN, IEE 802.1P/Q, and MPLS Management Interfaces
- SNMP version 3, Command Line Interface

CONTACT US

www.pt.com
E-mail: sales@pt.com

WWW.PT.COM

© 2010 Performance Technologies, Inc. All rights reserved. Specifications subject to change without notice. The names of actual companies, products, or services may be the trademarks, registered trademarks, or service marks of their respective owners in the United States and other countries.
DS/0810