INS8346B

PERFECTRON

Intel® Ivy Bridge Q77 Mini-ITX Industrial MB, Wide Temp. -40 to 85°C

KEY FEATURE

- Supports Intel® LGA 1155 Core™ i7/ i5/ i3 processor
- 2 x DDR3 SO-DIMM up to 16 GB
- Muliti-display: VGA, DVI-D, LVDS, HDMI
- 1 x PCIe x16
- 1 x mPCIe
- 1 x mSATA
- 8 x USB ports
- 6 x COM ports
- 16-bit DIO
- Wide operating temp. -40 to 85°C

it's perfect !

INS8346B

PERFECTRON

Intel® Ivy Bridge Q77 Mini-ITX Industrial MB, Wide Temp. -40 to 85°C

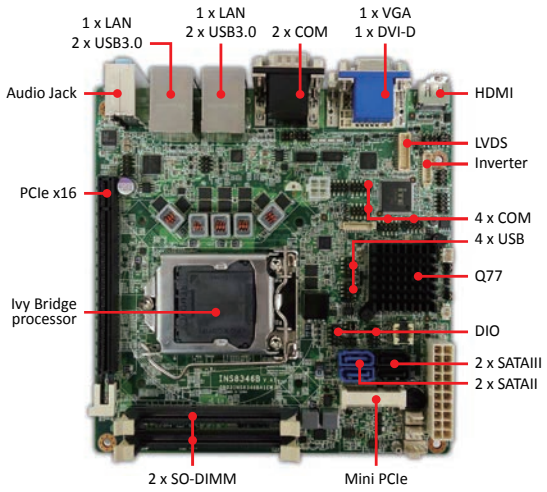

Main Features

- Supports Intel® LGA 1155 Core™ i7/ i5/ i3 processor
- 2 x DDR3 SO-DIMM up to 16 GB
- Muliti-display: VGA, DVI-D, LVDS, HDMI
- 1 x PCIe x16
- 1 x mPCIe
- 1 x mSATA
- 8 x USB ports
- 6 x COM ports
- 16-bit DIO
- Wide operating temp. -40 to 85°C

▶ Specifications

System

CPU Type	Intel® LGA1155 Core™ i7/i5/i3 Processor Core™ i7-3770 3.4 GHz (8M Cache, 95W) Core™ i5-3550S 3.0 GHz (6M Cache, 65W) Core™ i3-3220 3.3 GHz (3M Cache, 65W) Pentium® G2120 3.1 GHz (3M Cache, 65W)
Chipset	Intel® Q77
Memory Type	2 x 204-pin SO-DIMM DDR3 1333/1600 MHz up to 16 GB
BIOS	AMI® UEFI BIOS
Super I/O	ITE8786E
iAMT	Support iAMT 8.0
Watchdog	1-255 sec. or 1-255 min. software programmable, can generate system reset
Expansion Slot	1 x PCIe x16 Gen.2 1 x mPCIe 1 x mSATA

Display

Chipset	Intel® HD Grapics 4000 Integrated Graphics Engine
LVDS	Dual channel 24-bit LVDS
Display Type	VGA, LVDS, DVI, HDMI

Audio

Codec	Realtek ALC892 High Definition Audio Codec

Ethernet

Chipset	Intel® 82579LM & 82574L GbE

Rear I/O

VGA	1
DVI-D	1
HDMI	1
Ethernet	2 x RJ45
Audio	Mic-in, Line-in, Line-out
COM	2 x RS232/422/485 with 5V/12V selectable
USB	4 x USB 3.0

I/O Interface

SATA	2 x SATAIII (6 Gb/s) 2 x SATAII (3 Gb/s)
USB	4 x USB 2.0 ports by pin header
COM	4 x RS232 ports
	COM3~6 support RS232 by pin header
DIO	16-bit (8 in/8 out)
LVDS	1
PS/2	1
Fan	1 x CPU fan 2 x System fan connector

Mechanical and Environment

Form Factor	Mini-ITX Industrial MB
Power Type	ATX (20-pin + 4-pin)
Dimension	170 x 170 mm (6.7" x 6.7")
Operating Temp.	-40 to 85°C
Relative Humidity	10% to 90%, non-condensing

*All specifications and photos are subject to change without notice.

Block Diagram

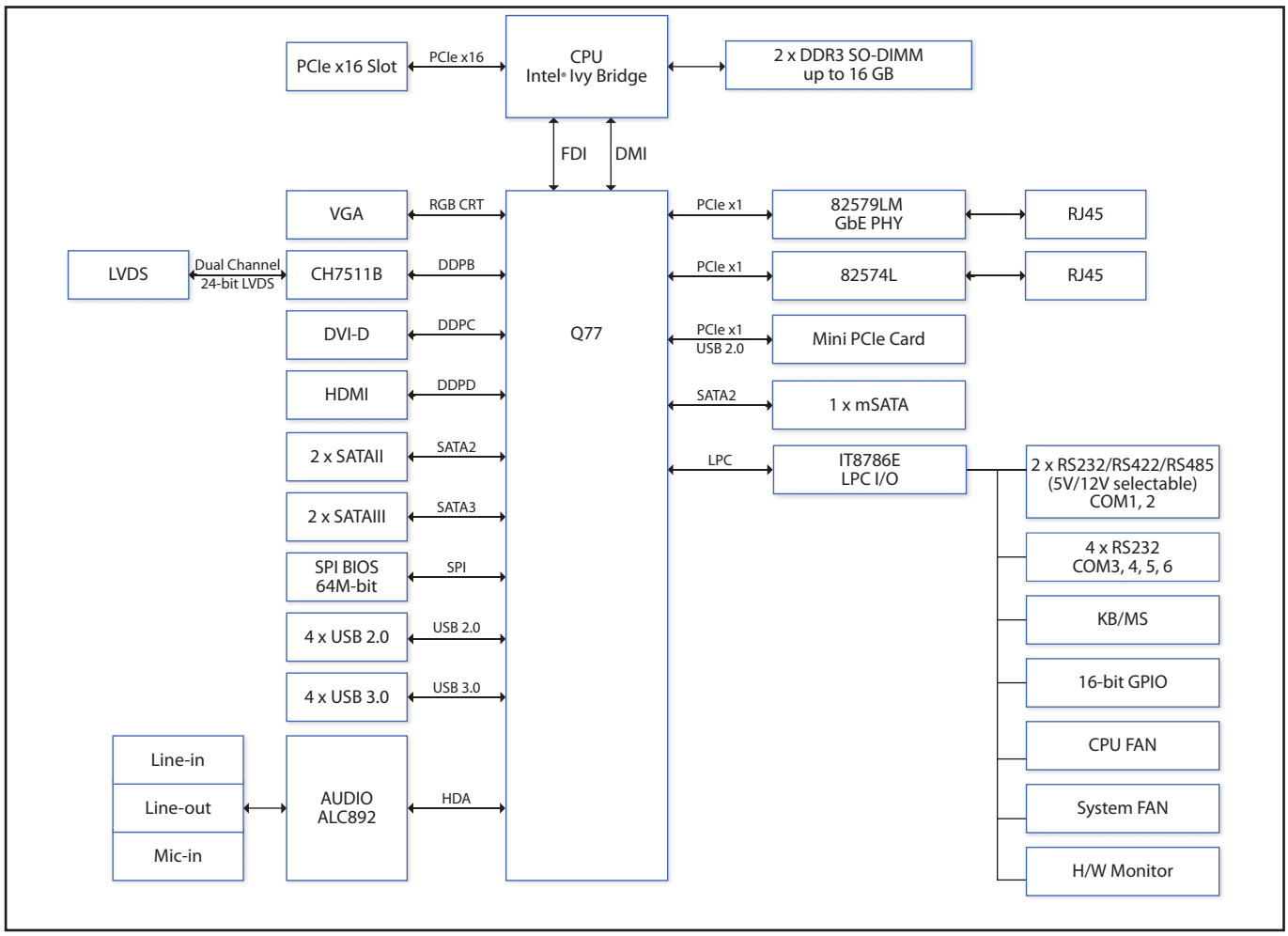

*All specifications and photos are subject to change without notice.

Packing List

- INS8346B Mini-ITX Industrial MB
- I/O shield
- 1 x SATA cable
- 2 x COM ports cable W/O bracket
- 1 x USB cable
- CD (Driver + user's manual)

Optional Accessories

Cable Kit

Audio cable
PS/2 cable

Thermal Kit

CPU cooler

Ordering Information

Part Number	Description
INS8346B-ET	Intel® Ivy Bridge Q77 Mini-ITX Industrial MB, -20 to 70°C
INS8346B-UT	Intel® Ivy Bridge Q77 Mini-ITX Industrial MB, -40 to 85°C
0C0181211600500L	Intel® i7-3770 (77W)
0C0181095203500L	Intel® i5-3550s (65W)
0C0181137502500L	Intel® i3-3220 (55W)
0C0181095801500L	Intel® G2120 (65W)
0C0180834302500L	Intel® i7-2600 (95W)
0C018I524000500L	Intel® i5-2400 (95W)
0C0181044204500L	Intel® i3-2120 (65W)
0C0181046204500L	Intel® G850 (65W)
0C0181046804500L	Intel® G540 (65W)

Applications

*All specifications and photos are subject to change without notice.