INS8313A

PERFECTRON

Intel® Pineview D525 Mini-ITX Industrial MB, 12V DC-in

KEY FEATURE

- Supports Intel® Pineview D525 CPU onboard
- VGA/LVDS dual display
- 1 x Mini PCIe slot
- Dual GbE LAN
- 9 x USB ports
- 6 x COM ports with 5V/12V selection
- 1 x RJ11 supports cash drawer
- 12V DC-in & 12V DC-out

it's perfect !

INS8313A

PERFECTRON

Intel® Pineview D525 Mini-ITX Industrial MB, 12V DC-in

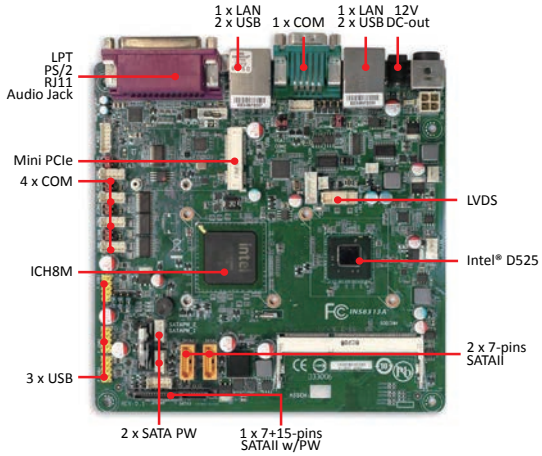

Main Features

- Supports Intel® Pineview D525 CPU onboard
- VGA/LVDS dual display
- 1 x Mini PCIe slot
- Dual GbE LAN
- 9 x USB ports
- 6 x COM ports with 5V/12V selection
- 1 x RJ11 supports cash drawer
- 12V DC-in & 12V DC-out

▸ Specifications

System

CPU Type	Intel® Atom™ D525 1.8 GHz
Chipset	Intel® ICH8M
Memory Type	1 x 204-pin SO-DIMM DDR3 800/1066 MHz up to 4 GB
BIOS	AMI® BIOS
Super I/O	ITE ITE87821
2nd Super I/O	Fintek F81214R
Watchdog	1-255 sec. or 1-255 min. software programmable, can generate system reset
Expansion Slot	1 x Mini PCIe

Display

Chipset	Integrated Intel® GMA3150 GFX Render core
Onboard VGA	Yes (Max. resolution 2048 x 1536)
LVDS	Supports single channel 18-bit LVDS (Max. resolution 1366 x 768)
Dual Independent Display Capability	VGA + LVDS

Audio

Codec	Realtek ALC269 High Definition Audio Code

Ethernet

Chipset	2 x RTL 8111E GbE LAN
WOL	Yes
Boot from LAN	Yes for PXE

Rear I/O

VGA	1
Ethernet	2 x RJ45
Audio	1 x Speaker-out
USB	4 x USB2.0
COM	1 x RS232/422/485 with 5V/12V selectable
PS/2	1
RJ11	1 supports cash drawer
LPT	1

Internal I/O

SATA	3 x SATAII (3 Gb/s)
	• 2 x 7-pin SATA II • 1 x 7-pin + 15-pin SATAII
USB	5 x USB2.0 ports by pin header
COM	5 x COM ports
	• COM2 port supports RS232/422/485 (0/5/12V) • COM3~COM6 ports support RS232 (0/5/12V) • COM4 port supports VFD mode
LVDS	20-pin connector
Fan	CPU/System fan connector

Mechanical and Environment

Form Factor	Mini-ITX Industrial MB
Power Type	12V DC-in, AT/ATX mode support
Dimensions	170 x 170 mm (6.7" x 6.7")
Operating Temp.	0 to 60 °C
Storage Temp.	-40 to 85°C
Relative Humidity	10% to 90%, non-condensing

*All specifications and photos are subject to change without notice.

▸ Block Diagram

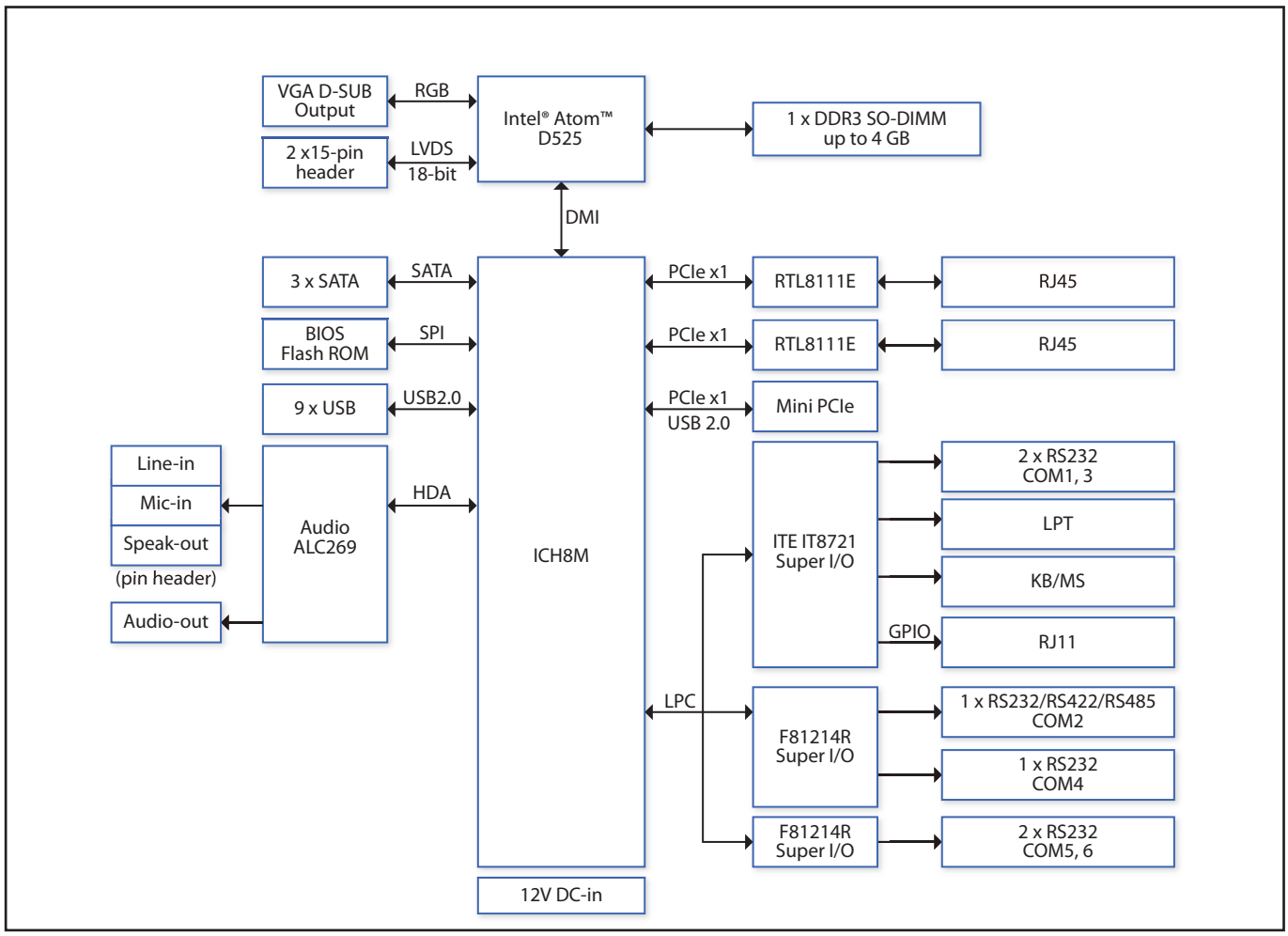

*All specifications and photos are subject to change without notice.

Packing List

- INS8313A Mini-ITX Industrial MB
- 1 x SATA cable
- 1 x COM port cable (4 ports)
- 1 x USB cable
- CD (Driver + user's manual)

Ordering Information

Modules

Model Number	Description
INS8313A	Mini-ITX Industrial MB on Intel® Pineview D525 CPU onboard with DDR3 SO-DIMM, Dual Display by VGA/LVDS, Dual GbE, Audio, 6 x COM, 9 x USB, and 12V DC-in

Optional Accessories

Thermal Kit

CPU cooler

Applications

*All specifications and photos are subject to change without notice.