INS8335C

PERFECTRON

Intel® Ivy Bridge QM77 Mini-ITX Industrial MB, Wide Temp. -40 to 85°C

KEY FEATURE

- Intel® 22nm Ivy Bridge Processor (Mobile)(rPGA988)
- 2 x DDR3 SO-DIMM up to 16 GB
- Muliti-display: VGA, DVI-D, LVDS, HDMI
- 1 x PCI, 1 x PCIe x1, 2 x Mini PCIe, 1 x mSATA
- 4 x SATA (2 x SATAIII, 2 x SATAII)
- 8 x USB ports (4 x USB 3.0, 4 x USB 2.0)
- 6 x COM ports
- 16-bit DIO (8 in/8 out)
- Wide operating temp. -40 to 85°C

it's perfect !

INS8335C

PERFECTRON

Intel® Ivy Bridge QM77 Mini-ITX Industrial MB, Wide Temp. -40 to 85°C

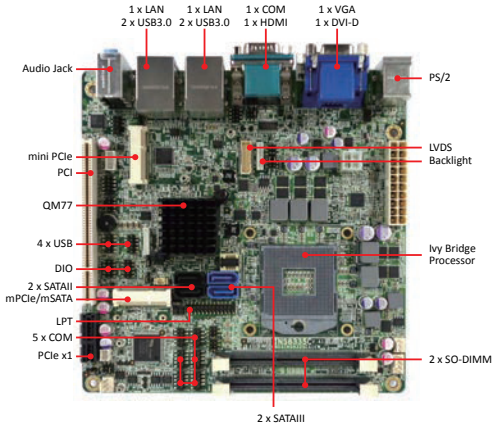

Main Features

SUPPORT
-20°C~+70°C

- Intel® 22nm Ivy Bridge Processor (Mobile)(rPGA988)
- 2 x DDR3 SO-DIMM up to 16 GB
- Muliti-display: VGA, DVI-D, LVDS, HDMI
- 1 x PCI, 1 x PCIe x1, 2 x Mini PCIe, 1 x mSATA,
- 4 x SATA (2 x SATAIII, 2 x SATAII)
- 8 x USB ports (4 x USB 3.0, 4 x USB 2.0)
- 6 x COM ports
- 16-bit DIO (8 in/8 out)
- Wide operating temp. -40 to 85°C

▶ Specifications

System

CPU Type	Intel® 22nm Ivy Bridge Processor (Mobile) socket rPGA988 Core™ i7-3610QE 2.3 GHz (6M Cache, 45W) Core™ i5-3610ME 2.7 GHz (3M Cache, 35W) Core™ i3-3120ME 2.4 GHz (3M Cache, 35W)
Chipset	Intel® QM77
Memory Type	2 x 204-pin SO-DIMM up to 16 GB dual channel DDR3 1333/1600 MHz, Non-ECC
BIOS	AMI® UEFI BIOS
Super I/O	F81866D
iAMT	iAMT 8.0
Watchdog	1-255 sec. or 1-255 min. software programmable, can generate system reset
Expansion Slot	1 x PCI 1 x PCIe x1 2 x Mini PCIe(one co-lay mSATA) 1 x mSATA

Display

Chipset	Integrated GFX in Ivy Bridge processor
Onboard VGA	Yes, (Max. resolution 2048 x 1536)
LVDS	Dual channel 24-bit LVDS, Max. 1920 x 1200
Onboard DVI-D	Yes, (Max. resolution 2048 x 1536)
Onboard HDMI	Yes, (Max. resolution 1920 x 1200)
Independent Display Capability	VGA, DVI-D, HDMI, LVDS

Audio

Codec	Realtek ALC892 High Definition Audio Codec

Ethernet

Chipset	1 x Intel® 82579LM & 1 x Intel® 82574L GbE
WOL	Yes
Boot from LAN	Yes

Rear I/O

VGA	1
DVI-D	1
HDMI	1
Ethernet	2 x RJ45
USB	4 x USB 3.0
Audio	Mic-in, Line-in, Line-out
COM Port	1x RS232/422/485 with 5V/12V selectable
PS/2	1 x keyboard, 1 x mouse

I/O Interface

SATA	2 x SATAIII (6 Gb/s), 2 x SATAII (3 Gb/s)
LVDS	30-pin connector
USB	4 x USB 2.0 ports by pin header
COM	5 x COM ports • COM2~3 ports RS232 with 5V/12V selectable by pin header • COM4 port supports RS232 by pin header • COM5~6 ports RS232/422/485 by pin header
DIO	16-bit (8 in/8 out)
Fan	1 x CPU fan, 2 x System fan
Parallel Port	2 x 13-pin header
SIM Card Holder	1

Mechanical and Environment

Form Factor	Mini-ITX Industrial MB
Power Type	ATX (20-pin + 4-pin)
Dimension	170 x 170 mm (6.7" x 6.7")
Operating Temp.	-40 to 85°C
Storage Temp.	-40 to 85°C
Relative Humidity	10% to 90%, non-condensing

*All specifications and photos are subject to change without notice.

Block Diagram

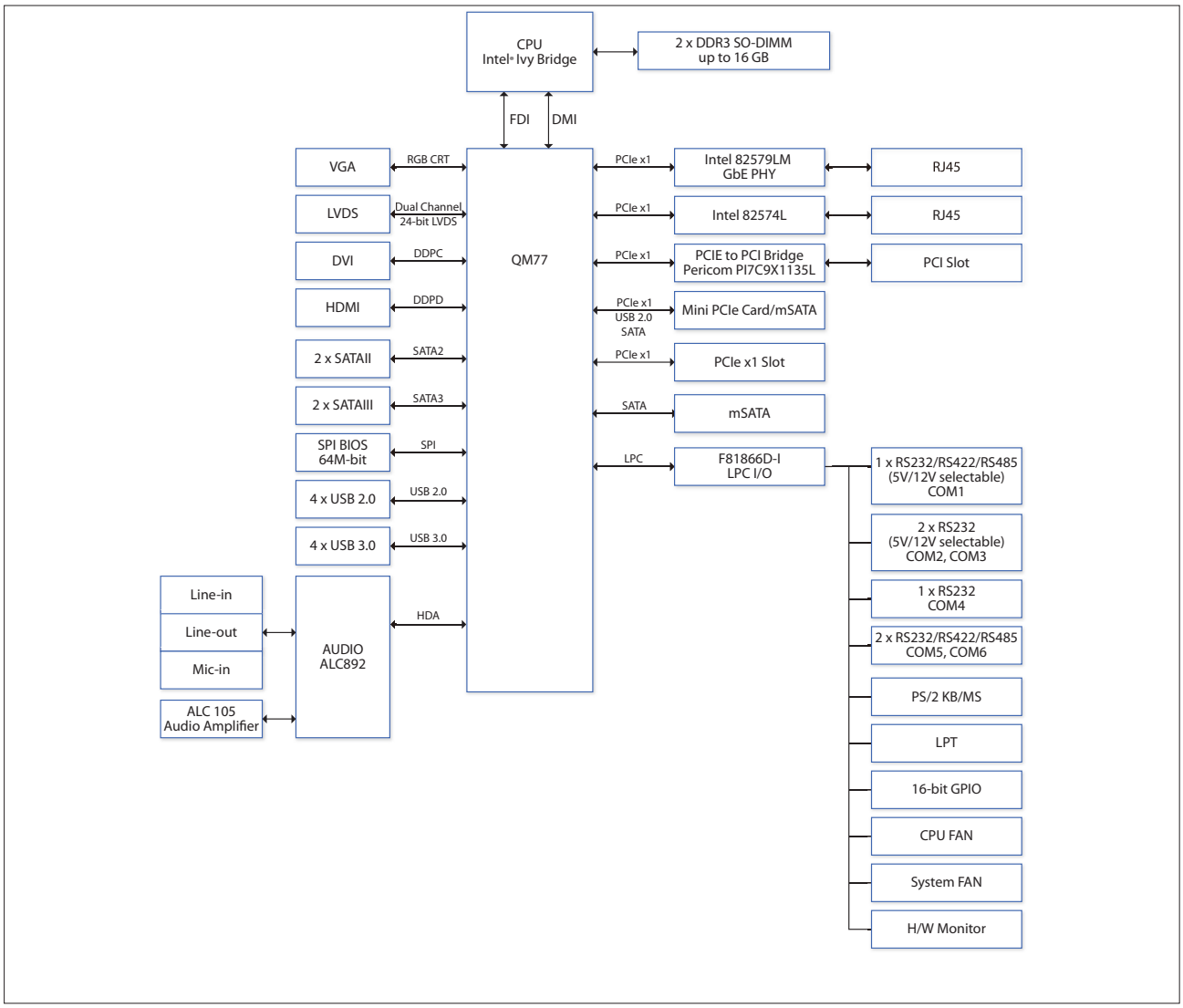

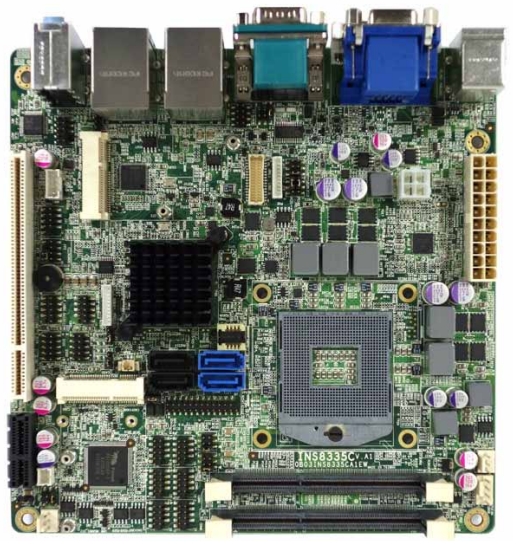

*All specifications and photos are subject to change without notice.

Packing List

- INS8335C Mini-ITX Industrial MB
- 1 x I/O shield
- 1 x SATA cable
- 2 x COM ports cable w/o bracket
- 1 x USB cable
- CD (Driver+ user's manual)

Optional Accessories

Ordering Information

Part Number	Description
INS8335C-ET	Mini-ITX Industrial MB Intel® 22nm Ivy Bridge Processor (Mobile) (-20 to 70°C)
INS8335C-UT	Mini-ITX Industrial MB Intel® 22nm Ivy Bridge Processor (Mobile) (-40 to 85°C optional)
0C0181118306C00L	Intel® i7-3610QE (45W)
0C0181115901C00L	Intel® i5-3610ME (35 W)
0C0181117902C00L	Intel® i3-3120ME (35 W)
0C0181117700C00L	Intel® Celeron 1020E (35W)

Cable Kit

LPT Cable

Thermal Kit

CPU cooler

Applications

*All specifications and photos are subject to change without notice.