INS8320B

PERFECTRON

Intel® Cedarview N2600 Mini-ITX Industrial MB, Wide Temp. -40 to 85°C

KEY FEATURE

- Supports Intel® Atom™ N2600 CPU onboard
- Single/Dual channel 18/24-bit LVDS
- 1 x Mini PCIe slot
- 1 x mSATA
- Dual GbE LAN (Intel® 82574L)
- 10 x COM ports
- 7 x USB ports
- 16-bit DIO (8 in/8 out)
- 9V to 24V DC-in
- Wide operating temp. -40 to 85°C

it's perfect!

INS8320B

PERFECTRON

Intel® Cedarview N2600 Mini-ITX Industrial MB, Wide Temp. -40 to 85°C

SUPPORT
-20°C~+70°C

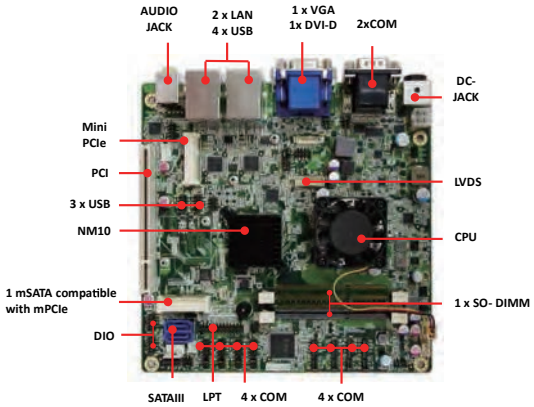

Main Features

- Supports Intel® Atom™ N2600 CPU onboard
- Single/Dual channel 18/24-bit LVDS
- 1 x Mini PCIe slot
- 1 x mSATA
- Dual GbE LAN (Intel® 82574L)
- 10 x COM ports
- 7 x USB ports
- 16-bit DIO (8 in/8 out)
- 9V to 24V DC-in
- Wide operating temp. -40 to 85°C

▸ Specifications

System

CPU Type	Intel® Atom™ N2600 1.6 GHz onboard
Chipset	Intel® NM10
Memory Type	1 x 204-pin SO-DIMM DDR3 800/1066 MHz up to 2 GB
BIOS	AMI® BIOS
Super I/O	IT8786E
Watchdog	1-255 sec. or 1-255 min. software programmable, can be generate system reset
Expansion Slot	1 x PCI slot 1 x mPCIe 1 x mSATA SSD storage compatible with PCIe Mini Card

Display

Chipset	Intel® PowerVR SGX545 Graphic core
Onboard VGA	Yes (Max. resolution 1920 x 1200 @ 60 Hz)
LVDS	Support 18/24-bits LVDS single/dual/channel DP: 2560 x 1600 @ 60 Hz eDP: 1920 x 1080 @ 60 Hz
Onboard DVI-D	Yes (Max. resolution 1920 x 1200 @ 60 Hz)
Dual Independent Display Capability	VGA+DVI, VGA+LVDS, LVDS+DVI

Audio

Codec	Realtek ALC887

Ethernet

Chipset	2 x Intel® 82574L GbE LAN
Disable LAN through BIOS	Yes
WOL	Yes
Boot from LAN	Yes for PXE

Rear I/O

VGA	1
DVI-D	1
COM	1 x RS232/422/485 with 5V/12V selection (COM1) 1 x RS232 with 5V/12V selection (COM2)
Ethernet	2 x RJ45
Audio	Line-out, Mic-in
USB	4 x ports with 5V

I/O Interface

SATA	2 x SATAII (3 Gb/s)
USB	3 ports by pin header
COM	8 x COM ports • COM3~COM10 ports support RS232 with 5V/12V selectable by pin header (COM5 port supports RS232/422/485 with 5V/12V selectable)
FAN	CPU/System fan connectors
GPIO	16-bit (8 in/8 out)
DIO	pin header (for cash drawer)
LVDS	2 x 15-pin connector
PS/2	2 x 4-pin header
Parallel	2 x 13-pin header

Mechanical and Environment

Form Factor	Mini-ITX Industrial MB
Power Type	9V to 24V DC-in
Dimension	170 x 170 mm (6.7" x 6.7")
Operating Temp.	-40 to 85°C
Storage Temp.	-40 to 85°C
Relative Humidity	10% to 90%, non-condensing

*All specifications and photos are subject to change without notice.

Block Diagram

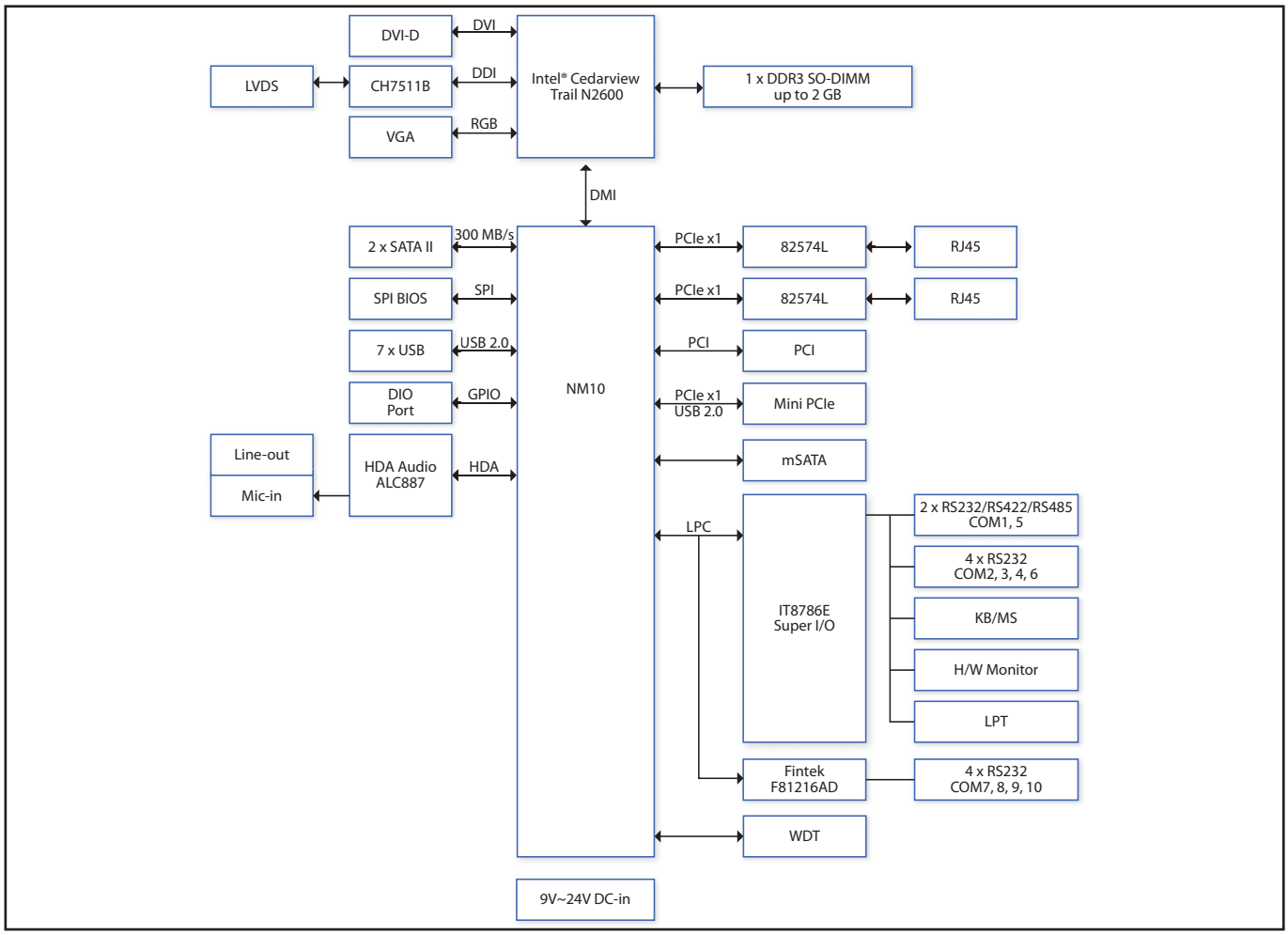

*All specifications and photos are subject to change without notice.

Packing List

- INS8320B Mini-ITX Industrial MB
- 1 x SATA cable
- 1 x SATA Power cable
- 1 x USB cable
- 2 x COM cable
- 1 x I/O shield
- CPU cooler
- CD (Driver+ user's manual)

Optional Accessories

- 1 x Audio cable
- 1 x PS/2 cable
- 1 x LPT cable

Ordering Information

Modules

Model Number	Description
INS8320B-ET	Mini-ITX Industrial MB Intel® Cedarview N2600 with DDR3 SO-DIMM, Multi-Display by VGA, DVI-D, LVDS, Dual Intel® GbE LAN, 10 x COM, 8 x USB and 9 to 24V DC-in (-20 to 70°C)
INS8320B-UT	Mini-ITX Industrial MB Intel® Cedarview N2600 with DDR3 SO-DIMM, Multi-Display by VGA, DVI-D, LVDS, Dual Intel® GbE LAN, 10 x COM, 8 x USB and 9 to 24V DC-in (-40 to 85°C optional)

Applications

*All specifications and photos are subject to change without notice.