INS8145A

PERFECTRON

Intel® Sandy Bridge Q67 ATX Industrial MB with Core™ i7/i5/ i3 Processor



KEY FEATURE

- Supports Intel® LGA 1155 Core™ i7/ i5/ i3 processor
- Muti-display: VGA + DVI-D, VGA + HDMI, HDMI + DVI-D
- Dual channel DDR3 1066/1333 MHZ up to 32 GB
- Intel® PCIe GbE with Intel® AMT 7.0 supported
- PCIe x16, PCIe x4, PCIe x1, 4 x PCI slot
- 2 x SATAIII + 4 x SATAII
- 14 x USB ports
- 6 x COM ports

it's perfect !

INS8145A

PERFECTRON

Intel® Sandy Bridge Q67 ATX Industrial MB with Core™ i7/i5/i3 Processor

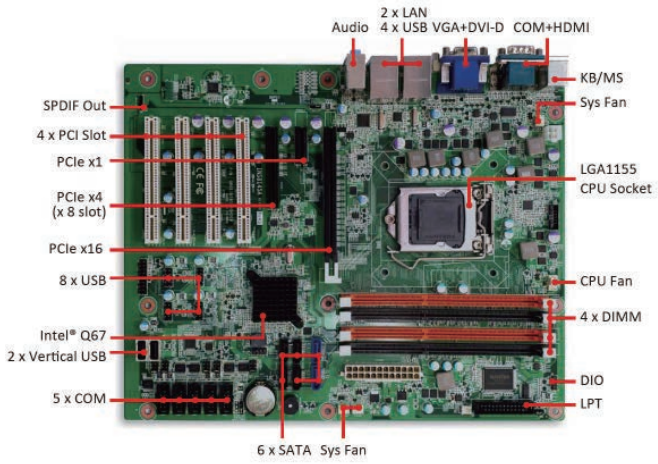

Main Features

- Supports Intel® LGA 1155 Core™ i7/ i5/ i3 processor
- Muti-display: VGA + DVI-D, VGA + HDMI, HDMI + DVI-D
- Dual channel DDR3 1066/1333 MHZ up to 32 GB
- Intel® PCIe GbE with Intel® AMT 7.0 supported
- PCIe x16, PCIe x4, PCIe x1, 4 x PCI slot
- 2 x SATAIII + 4 x SATAII
- 14 x USB ports
- 6 x COM ports

▸ Specifications

System

CPU Type	Intel® LGA 1155 socket Core™ i7/i5/i3 processor Core™ i7-2600 3.4 GHz (8M Cache, 95W) Core™ i5-2400 3.1 GHz (6M Cache, 95W) Core™ i3-2120 3.3 GHz (3M Cache, 65W) Pentium® G850 2.9 GHz (3M Cache, 65W) Pentium® G540 2.5 GHz (2M Cache, 65W)
Chipset	Intel® Q67 Express Chipset (Cougar Point) Controller Hub
Memory Type	4 x 240-pin 1066/1333 MHz Dual channel DDR3 SDRAM unbuffered DIMM support (Max. 32 GB)
BIOS	AMI® UEFI BIOS
Super I/O	NUVOTON NCT6776F
2nd IO	F81216AD
iAMT	Support iAMT 7.0
Watchdog	1-255 sec. or 1-255 min. software programmable, can generated system reset
Expansion Slot	1 x PCIe x16 Gen.2 1 x PCIe x4 (x8 slot, one side open) 1 x PCIe x1 4 x PCI

Display

Chipset	Intel® HD Grapics 2000 Integrated Graphics Engine
Display Interface	VGA/HDMI/DVI-D Integrated in the Intel® Q67

Audio

Codec	ALC892 High Definition Audio Codec with Mic-in, Line-in, Line-out

Ethernet

Chipset	Intel® 82579LM & 82574L GbE
WOL	Yes
Boot from LAN	Yes for PXE

Rear I/O

VGA	1
DVI-D	1
HDMI	1
Ethernet	2
Audio	Line-out, Mic-In, Line-in
USB	4 x USB2.0
COM1	1 x RS232/422/485 with 5V/12V selection
PS/2	1 x PS/2 Keyboard and mouse

I/O Interface

SATA	2 x SATAIII (6 Gb/s, reserve space) 4 x SATAII (3 Gb/s, reserve space) *6 x SATA RAID (S/W 0, 1, 5, 10) *2 x SATAIII & 4 x SATAII both support RAID 0,1, 5,10
USB	10 x USB 1.1/2.0 port •8 port by 2 x 5-pin header •2 x Vertical USB connectors
COM	5 x COM ports •COM2 supports RS232/422/485 with 5V/12V selectable by pin header •COM3~6 support RS232 with 5V/12V selectable by pin header
FAN	CPU FAN (1 x 4-pin), System FAN (1 x 3-pin)
DIO	8-bit (4 in/4 out)

Mechanical and Environment

Form Factor	ATX IMB
Power Type	ATX (24-pin + 4-pin)
Dimension	305 x 244 mm (12" x 9.6")
Operating Temp.	-20 to 70°C
Storage Temp.	-40 to 85°C
Relative Humidity	10% to 90%, non-condensing

*All specifications and photos are subject to change without notice.

Block Diagram

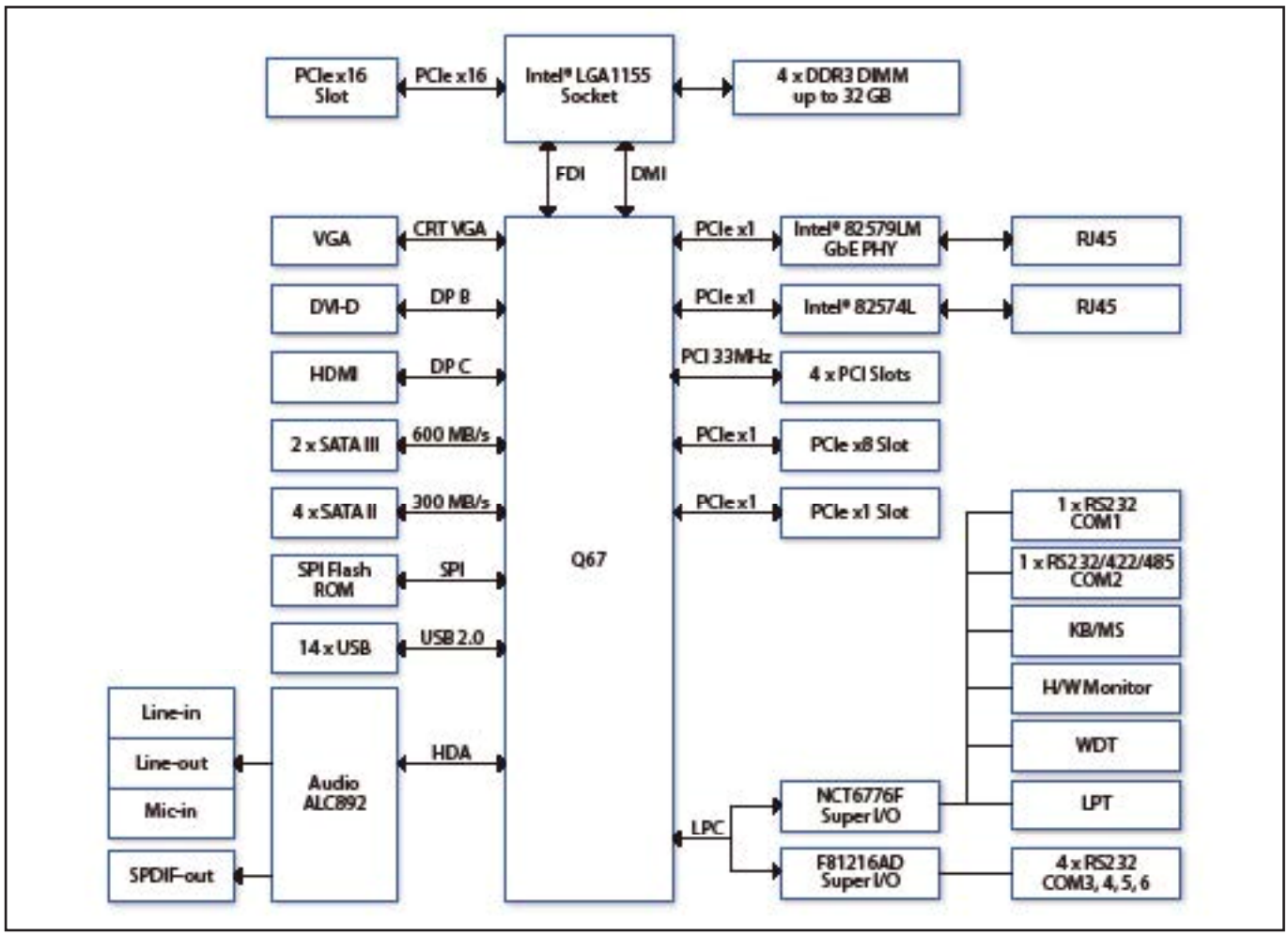

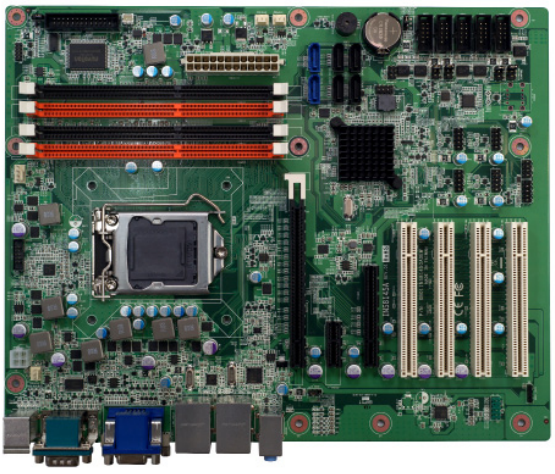



*All specifications and photos are subject to change without notice.

Packing List

- INS8145A ATX Industrial MB
- I/O shield
- 1 x SATA cable
- 1 x COM ports cable w/o bracket
- 1 x USB cable with bracket
- CD (Driver + user's manual)

Ordering Information

Part Number	Description
INS8145A	ATX Industrial MB supports 32nm IntelR LGA 1155 Core? i7/ i5/ i3 with DDR3 SDRAM HDMI/ DVI/ VGA display, Dual PCIe Gbe, Audio, 14 x USB, and 6 x SATA
0C0180834302500L	Intel® i7-2600 (95W)
0C018I524000500L	Intel® i5-2400 (95W)
0C0181044204500L	Intel® i3-2120 (65W)
0C0181046204500L	Intel® G850 (65W)
0C0181046804500L	Intel® G540 (65W)



Applications









*All specifications and photos are subject to change without notice.