INS8153A

PERFECTRON

Intel®C216 ATX Industrial MB, supporting Xeon E3, Ivy Bridge CPU



KEY FEATURE

- Supports Intel® LGA 1155 22nm Ivy Bridge Processor
- Multi Display: VGA, DVI-D, HDMI
- Dual channel DDR3 1066/1333/1600 MHz, up to 32 GB
- 2 x PCIe x16, 2 x PCIe x4, 3 x PCI, 1 x mPCIe (optional mSATA supported)
- 2 x SATAIII, 2 x SATAII
- 14 x USB ports
- 6 x COM ports
- 16-bit DIO

it's perfect !

INS8153A

PERFECTRON

Intel®C216 ATX Industrial MB, supporting Xeon E3, Ivy Bridge CPU

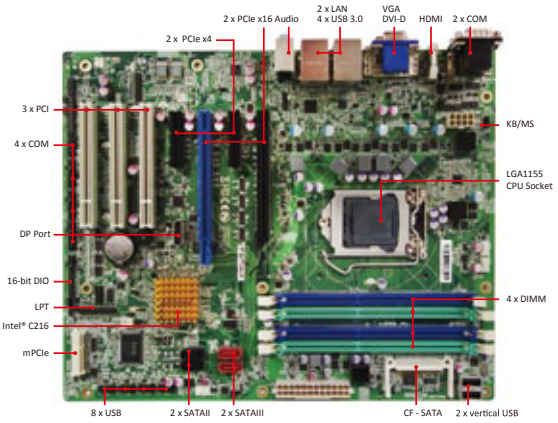

Main Features

- Supports Intel® LGA 1155 22nm Ivy Bridge Processor
- Multi Display: VGA, DVI-D, HDMI
- Dual channel DDR3 1066/1333/1600 MHz, up to 32 GB
- 2 x PCIe x16, 2 x PCIe x4, 3 x PCI,
  1 x mPCIe (optional mSATA supported)
- 2 x SATAIII, 2 x SATAII
- 14 x USB ports
- 6 x COM ports
- 16-bit DIO

▸ Specifications

System

CPU Type	Intel® 22nm Ivy Bridge processor Xeon® E3-1275v2 3.5 GHz (8M Cache, 77W) Xeon® E3-1225v2 3.2 GHz (8M Cache, 77W) Core™ i3-3220 3.3 GHz (3M Cache, 65W) Pentium® G2120 3.1 GHz (3M Cache, 65W)
Chipset	Intel® C216
Memory Type	4 x 240-pin ECC/Non-ECC DIMM dual channel DDR31066/1333/1600 MHz, up to 32 GB
BIOS	AMI® UEFI BIOS
Super I/O	ITE8728F
2nd I/O	Fintek F81216AD
iAMT	iAMT 8.0
Watchdog	1-255 sec. or 1-255 min. software programmable, can generate system reset
Expansion Slot	2 x PCIe x16 2 x PCIe x4 3 x PCI 1 x mPCIe (optional mSATA supported)

Display

Chipset	Intel® HD Graphics 4000 intergrated Graphic Engine
Onboard VGA	Yes (Max resolution 2560 x 1600 @ 60 Hz)
Independent Display Capability	VGA, DVI-D, HDMI

Audio

Codec	Realtek ALC887 HDA Codec

Ethernet

Chipset	1 x Intel® 82579LM & 1 x Intel® 82574L GbE
WOL	Yes
Boot from LAN	Yes

Rear I/O

VGA	1
DVI-D	1
HDMI	1
Ethernet	2 x RJ45
Audio	Line-out, Mic-in, Line-in
USB	4 x USB 3.0
COM1/2	2 x RS232/422/485 with 5V/12V selectable

I/O Interface

SATA	2 x SATAIII (6 Gb/s) 2 x SATAII (3 Gb/s)
CF-SATA	1
USB	10 x USB • 2 x Vertical USB ports onboard • 8 x onboard by pin header
COM	4 x COM ports COM3~6 ports support RS232 with 5V/12V selectable by pin header
FAN	1 x CPU fan 3 x System fan
DIO	16-bit (8 in/8 out)
PS/2	1 x pin header for PS/2 keyboard and mouse
Parallel Port	2 x 13-pin header

Mechanical and Environment

Form Factor	ATX Industrial MB
Power Type	ATX (24-pin + 8-pin)
Dimension	305 x 244 mm (12" x 9.6")
Operating Temp.	-20°C to 70°C
Storage Temp.	-40°C to 85°C
Relative Humidity	10% to 90%, non-condensing

*All specifications and photos are subject to change without notice.

Block Diagram

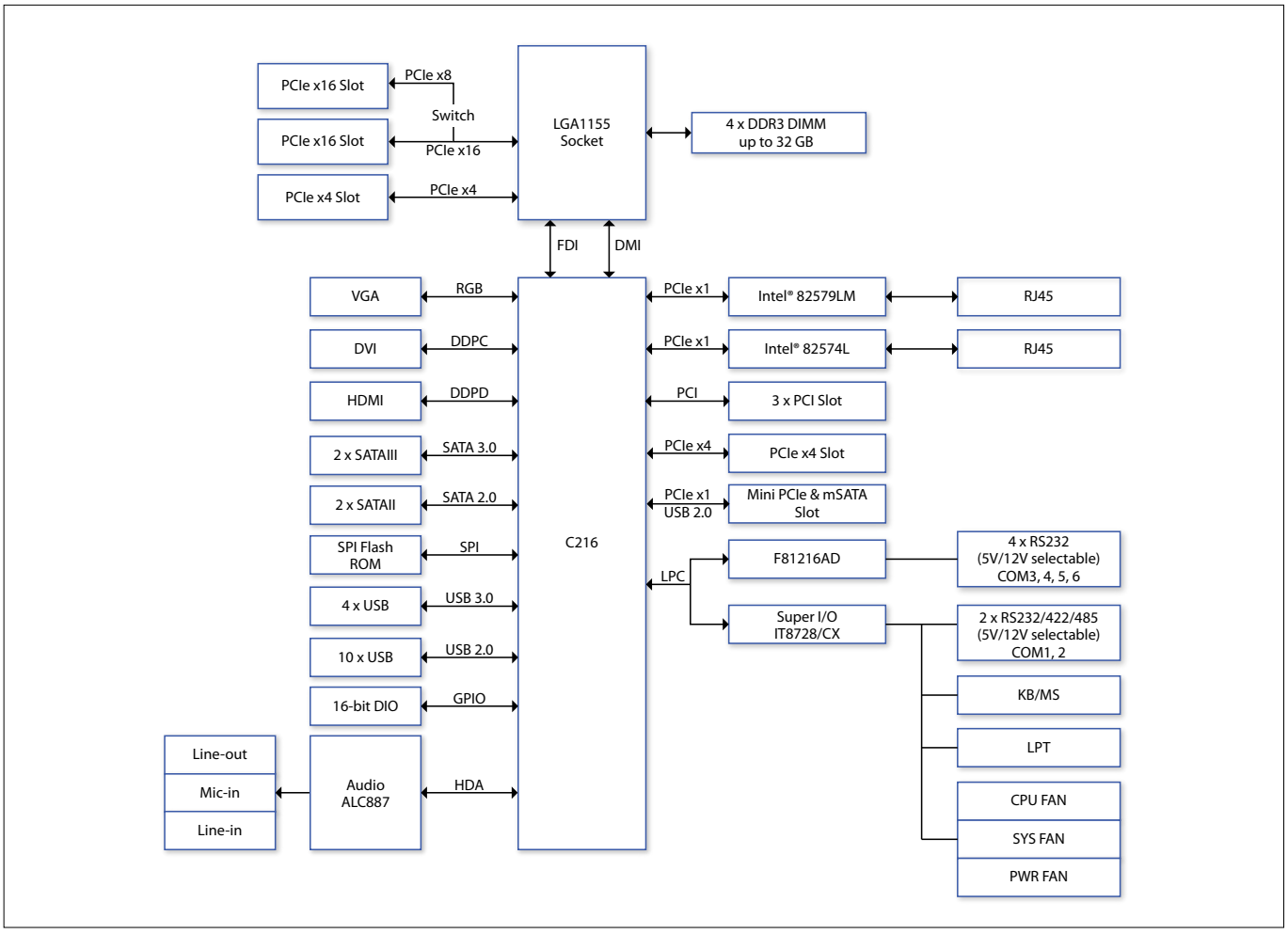





*All specifications and photos are subject to change without notice.

Packing List

- INS8153A ATX Industrial MB
- I/O shield
- 1 x SATA cable
- 2 x COM port cable w/o bracket
- 1 x USB cable with bracket
- CD (Driver + user's manual)

Optional Accessories

CF-SATA Card

Innodisk CF-SATA Series



Ordering Information

Part Number	Description
INS8153A	ATX Industrial MB supports 22nm Intel® LGA 1155 Ivy Bridge processor
0C0181098702500L	Intel® E3-1275v2 (95W)
0C0181160603500L	Intel® E3-1225v2 (95W)
0C0181137502500L	Intel® i3-3220 (55W)
0C0181095801500L	Intel® G2120 (65W)
0C0181044204500L	Intel® i3-2120 (65W)
0C0181046204500L	Intel® G850 (65W)
0C0181046804500L	Intel® G540 (65W)

Applications









*All specifications and photos are subject to change without notice.