Model number

KCD2-E2L

Sensor output interface terminal with lead breakage monitoring

Features

- 1-channel terminal amplifier
- Input for NAMUR sensors
- DC 24 V supply voltage
- Standard interface for prevention of signal transmission errors
- Switching status indicator, yellow LED
- Lead breakage monitoring: The lead breakage monitoring can be disconnected by bridging terminals 1 and 3 (When using a mechanical contact a 10 kOhm resistor is required in parallel circuit)
- Short-circuit proof electronic output
- Low noise sensitivity
- Compact terminal housing
- Mounting by clipping onto standard 35 mm rail to DIN EN 50022
- Protection degree IP20

Technical data

Indicators/operating means	
LED yellow	switch output
Electrical specifications	
Operating voltage	10 ... 30 V DC
Operating current	approx. 22 mA
Ripple	≤ 10 %
Input	
Connection	terminals 1+, 2-
Connectable sensor types	NAMUR
Pulse length/pulse interval	≥ 0.5 ms / ≥ 0.5 ms
Short-circuit current	approx. 8 mA
Sensor supply	8 V DC
Switching point	1.2 ... 2.1 mA hysteresis approx. 0.2 mA
Lead monitoring	with
Trip value	1 kHz
Output	
Connection	terminal 4+
Current	200 mA short-circuit proof
Transistor	PNP
Signal level	U_B - 1.1V
Transfer characteristics	
Mode of operation	NO
Switching frequency	1 kHz
Ambient conditions	
Ambient temperature	-25 ... 70 °C (248 ... 343 K)
Storage temperature	-25 ... 85 °C (248 ... 358 K)
Mechanical specifications	
Connection	self-opening apparatus connection terminals, max. core cross-section 0.34 ... 2.5 mm^2
Mass	60 g
Dimensions	20x60x40 (in mm)

Date of issue 2007-06-13 018358_ENG.xml

Subject to reasonable modifications due to technical advances. Copyright Pepperl+Fuchs, Printed in Germany

Dimensions

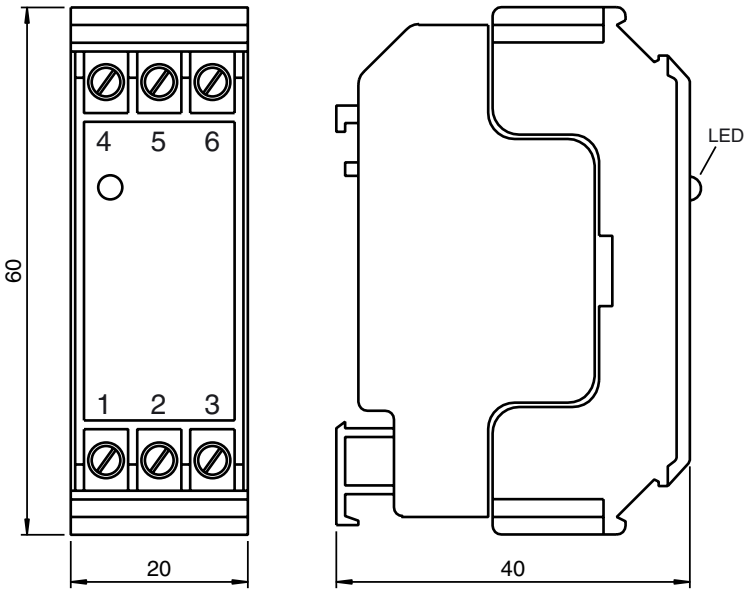

Electrical connection

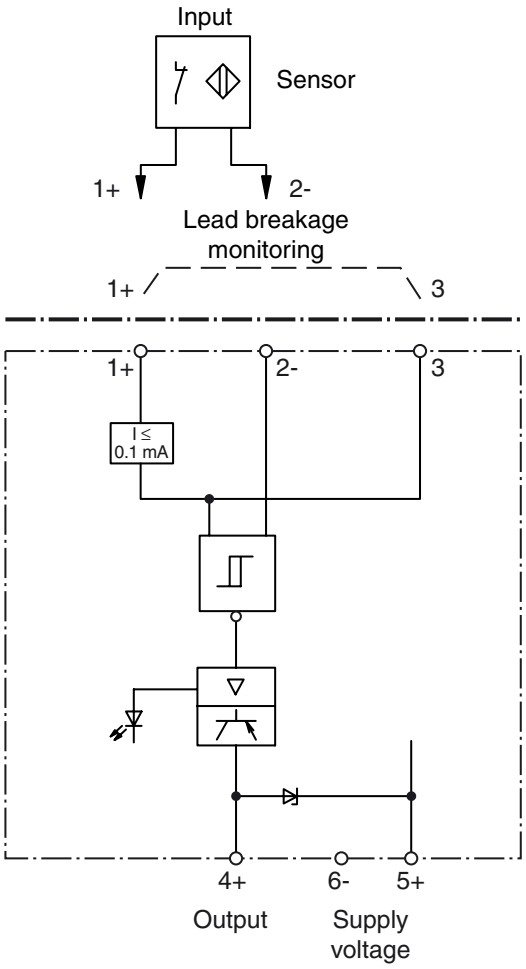

Date of issue 2007-06-13 018358_ENG.xml

Copyright Pepperl+Fuchs, Printed in Germany