Features

- 1-channel isolated barrier
- 24 V DC supply (Power Rail)
- Input HART with transmitter supply
- 3 analog outputs 4 mA ... 20 mA
- Parameterization via control panel

Function

At the HART Loop Converter can be connected HART compatible transmitter and positioner. The signals are transmitted only through the HART protocoll.

The device analyzes up to 4 HART variables and converts them to analog current signals.

The device can supply 2-wire transmitter. For retrofitting the HART Loop Converter can be connected to existing field circuits.

The operation is performed via an operator panel on the front side of the device.

Application

- Configurable as primary or secondary master
- Automatic HART burst supported
- Support for a HART handheld device connected on safe area side
- Can be configured to assign the same input variable to multiple outputs (signal splitting)

Assembly

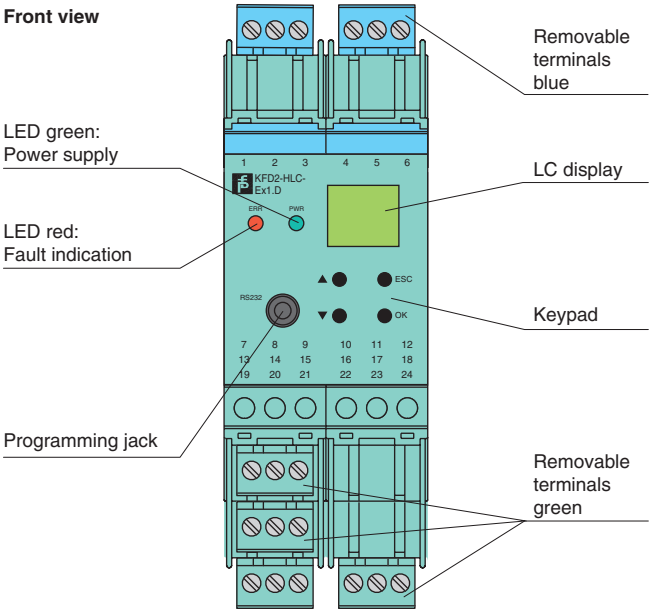

HART®

Connection

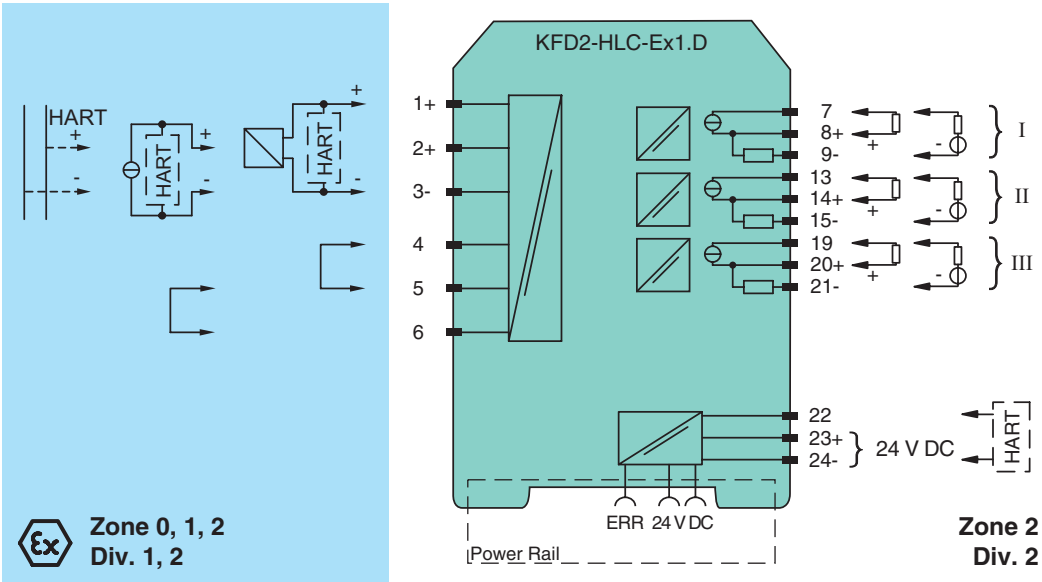

Release date 2008-02-12 15:33 Date of issue 2008-02-12 198804_ENG.xml

Copyright Pepperl+Fuchs, Printed in Germany

Supply	
Connection	Power Rail or terminals 23+, 24-
Rated voltage	19 ... 30 V DC
Rated current	approx. 120 mA at 24 V DC
Power loss	2.3 W
Power consumption	2.9 W
Input	
Connection	terminals 1, 2, 3, 4, 5, 6
Input signal	HART communication, transmitter supply
Open-circuit voltage/short-circuit current	typ. 24 V / 28 mA
Input resistance	250 Ω , 5 % (terminals 2, 3 and with jumper on 5, 6)
Available voltage	≥ 15.5 V at 20 mA, short-circuit proof
Output	
Connection	output I: terminals 7, 8, 9 , output II: terminals 13, 14, 15 , output III: terminals 19, 20, 21
Current range	4 ... 20 mA , source or sink mode
Load	≤ 650 Ω , source mode
Voltage range	5 ... 30 V , sink mode from external supply
Collective error message	Power Rail and LED red
Fault signal	downscale I ≤ 2 mA, upscale I ≥ 21.5 mA (acc. NAMUR NE43) or hold measurement value
Other outputs	HART handheld device on terminals 22, 24
Transfer characteristics	
Output I, II, III	
Resolution	≤ 2 µA
Accuracy	< 20 µA, 10 µA typ.
Influence of ambient temperature	< ± 2 µA/K
Duration of measurement/Response delay	HART message acquisition time plus 100 ms
Electrical isolation	
Output I/II/III/power supply	function insulation acc. to IEC 62103, rated insulation voltage 50 V_{rms}
Directive conformity	
Electromagnetic compatibility	
Directive 89/336/EC	EN 61326
Low voltage	
Directive 73/23/EEC	IEC 62103
Conformity	
Electromagnetic compatibility	NE 21
Protection degree	IEC 60529
Protection against electric shock	IEC 60664-1
Ambient conditions	
Ambient temperature	-20 ... 60 °C (253 ... 333 K)
Mechanical specifications	
Protection degree	IP20
Mass	300 g
Dimensions	40 x 119 x 115 mm (1.6 x 4.7 x 4.5 in) , housing type C3
Data for application in conjunction with hazardous areas	
EC-Type Examination Certificate	BASEEFA 07 ATEX 0174 , for additional certificates see www.pepperl-fuchs.com
Group, category, type of protection	Ex II (1)GD [Ex ia] IIC [Ex iaD]
Input	Ex ia/Ex ia D
Supply	
Safety maximum voltage U_m	253 V AC (Attention! The rated voltage can be lower.)
Equipment	terminals 1, 4/3 (with link between terminals 4 and 5)
Voltage U_o	25.2 V
Current I_o	104.9 mA
Power P_o	0.661 W
Equipment	terminals 2, 5/3
Voltage U_i	< 28 V
Power P_i	< 1.33 W
Voltage U_o	1.1 V
Current I_o	11.9 mA
Power P_o	4 mW
Output I, II, III	terminals 7, 8, 9; 13, 14, 15; 19, 20, 21 non-intrinsically safe
Safety maximum voltage U_m	253 V (Attention! U_m is no rated voltage.)
Statement of conformity	Pepperl+Fuchs

Release date 2008-02-12 15:33 Date of issue 2008-02-12 198804_ENG.xml

Copyright Pepperl+Fuchs, Printed in Germany

Group, category, type of protection, temperature classification	Ex II 3G Ex nA II T4 X
Electrical isolation	
Input/other circuits	safe electrical isolation acc. to EN 60079-11, voltage peak value 375 V
Directive conformity	
Directive 94/9 EC	EN 60079-0 , EN 60079-11 , EN 61241-0 , EN 61241-11
General information	
Supplementary information	EC-Type Examination Certificate, Statement of Conformity, Declaration of Conformity and instructions have to be observed where applicable. For information see www.pepperl-fuchs.com.

Accessories

Power feed modules KFD2-EB2...

The power feed module is used to supply the devices with 24 V DC via the Power Rail. The fuse-protected power feed module can supply up to 100 individual devices depending on the power consumption of the devices. A galvanically isolated mechanical contact uses the Power Rail to transmit collective error messages.

Power Rail UPR-03

The Power Rail UPR-03 is a complete unit consisting of the electrical inset and an aluminium profile rail 35 mm x 15 mm. To make electrical contact, the devices are simply engaged.

The Power Rail must not be fed via the device terminals of the individual devices!

Release date 2008-02-12 15:33 Date of issue 2008-02-12 198804_ENG.xml

Copyright Pepperl+Fuchs, Printed in Germany