TECHNICAL INFORMATION

Vibracon LVL-A7

Vibration Limit Switch

Limit Switch for Liquids

ISO9001

CE

PEPPERL+FUCHS
PROTECTING YOUR PROCESS

With regard to the supply of products, the current issue of the following document is applicable: The General Terms of Delivery for Products and Services of the Electrical Industry, published by the Central Association of the Electrical Industry (Zentralverband Elektrotechnik und Elektroindustrie (ZVEI) e.V.) in its most recent version as well as the supplementary clause: "Expanded reservation of proprietorship"

Application

The Vibracon LVL-A7 is a limit switch for liquids and is used in tanks, vessels and pipes.

The device is used for overfill prevention or pump protection in cleaning and filter systems as well as in cooling and lubrication vessels, for instance.

Ideal for applications in which float switches or conductive, capacitance and optical sensors have been used up to now. The device also works in areas where these measuring principles are not suitable due to conductivity, buildup, turbulence, flow conditions or air bubbles.

The device can be used for process temperatures up to:

- 100 °C (212 °F)
- 150 °C (302 °F)

Not suitable for hazardous areas.

The use of the Vibracon LVL-A7H is recommended for hygiene areas.

Your benefits

- Operational safety, reliability and universal application thanks to the tuning fork measuring principle
- Robust stainless steel housing (316L)
- External function test with test magnet
- Onsite function check possible thanks to LED indication
- Compact design for easy installation even in confined conditions or hard-to-access areas

1 Important Document Information 6
1.1 Document Conventions 6
2 Function and System Design 8
2.1 Measuring Principle 8
2.2 Measuring System 8
3 Input 9
3.1 Measured Variable 9
3.2 Measuring Range 9
4 Output 10
4.1 Switch Output 10
4.2 Operating Modes 10
5 Power Supply 11
5.1 Supply Voltage 11
5.2 Power Consumption 11
5.3 Current Consumption 11
5.4 Residual Ripple 11
5.5 Electrical Connection 12
5.6 Electronic Version 3-Wire DC-PNP 13
5.7 Electronic Version 2-Wire AC/DC 16
5.8 Overvoltage Protection 17
6 Performance Characteristics 18
6.1 Reference Operating Conditions 18
6.2 Switch Point 18
6.3 Hysteresis 18
6.4 Non-Repeatability 18
6.5 Influence of Ambient Temperature 18
6.6 Influence of Medium Temperature 18
6.7 Influence of Medium Pressure 18
6.8 Switching Delay 18

6.9 Switch-on Delay 18
6.10 Measuring Frequency 18
6.11 Measured Error 18

7 Installation 19
7.1 Orientation 19
7.2 Installation Instructions 20
7.3 Length of Connecting Cable 22

8 Environment 23
8.1 Ambient Temperature 23
8.2 Storage Temperature 24
8.3 Climate Class 24
8.4 Altitude 24
8.5 Degree of Protection 24
8.6 Shock Resistance 24
8.7 Vibration Resistance 24
8.8 Electromagnetic Compatibility 24
8.9 Reverse Polarity Protection 24
8.10 Short-Circuit Protection 25

9 Process 26
9.1 Process Temperature Range 26
9.2 Process Pressure Range 26
9.3 Density 26
9.4 State of Aggregation 26
9.5 Viscosity 26
9.6 Solids Contents 26
9.7 Lateral Loading Capacity 26

10 Mechanical Construction 27
10.1 Design 27
10.2 Connector 28
10.3 Tuning Fork 29
10.4 Sensor Type 30
10.5 Weight 33
10.6 Materials 33
10.7 Surface Roughness 34
11 Operability 35
11.1 LED Display 35
11.2 Function Test with Test Magnet 36
12 Certificates and Approvals 37
12.1 CE Mark 37
12.2 Approval 37
12.3 Overfill Prevention 37
12.4 Inspection Certificates 37
12.5 Pressure Equipment Directive 37
12.6 Other Standards and Guidelines 37
13 Ordering Information 38
13.1 Product Structure 38
13.2 Additional Options 39
14 Accessories 41
14.1 Included Accessories 41
14.2 Optional Accessories 41
15 Documentation 43

1 Important Document Information

1.1 Document Conventions

1.1.1 Symbols Used

This document contains symbols for the identification of warning messages and of informative messages.

Warning Messages

You will find warning messages in instances, whenever dangers may arise from your actions. It is mandatory that you observe these warning messages for your personal safety and in order to avoid property damages.

Depending on the risk level, the warning messages are displayed in descending order as follows:

Danger!

This symbol indicates an imminent danger.

Non-observance will result in personal injury or death.

Warning!

This symbol indicates a possible fault or danger.

Non-observance may cause personal injury or serious property damage.

Caution!

This symbol indicates a possible fault.

Non-observance could interrupt the device and any connected systems and plants, or result in their complete failure.

Informative Symbols

Note!

This symbol brings important information to your attention.

Action

This symbol indicates a paragraph with instructions. You are prompted to perform an action or a sequence of actions.

1.1.2 Electrical Symbols

Symbol	Meaning
⏚	**Ground connection** A grounded terminal which, as far as the operator is concerned, is grounded via a grounding system.
⏦	**Protective ground connection** A terminal which must be connected to ground prior to establishing any other connections.

Table 1.1

1.1.3 Symbols for Certain Types of Information

Symbol	Meaning
✅	**Allowed** Indicates procedures, processes or actions that are allowed.
❌	**Forbidden** Indicates procedures, processes or actions that are forbidden.

Table 1.2

1.1.4 Symbols in Graphics

Symbol	Meaning
1, 2, 3 ...	Item numbers
A, B, C, ...	Views
A-A, B-B, C-C, ...	Sections

Table 1.3

2 Function and System Design

2.1 Measuring Principle

A piezoelectric drive causes the tuning fork of the device to vibrate at its resonance frequency. When the tuning fork is immersed in a liquid, its intrinsic frequency changes due to the change in density of the surrounding medium. The electronics system in the limit switch monitors the resonance frequency and indicates whether the tuning fork is vibrating in air or is covered by liquid.

A signal is output via the DC-PNP or AC/DC electrical connection.

2.2 Measuring System

The measuring system consists of a limit switch, e. g. for connection to programmable logic controllers (PLC), a mini-contactor or solenoid valve.

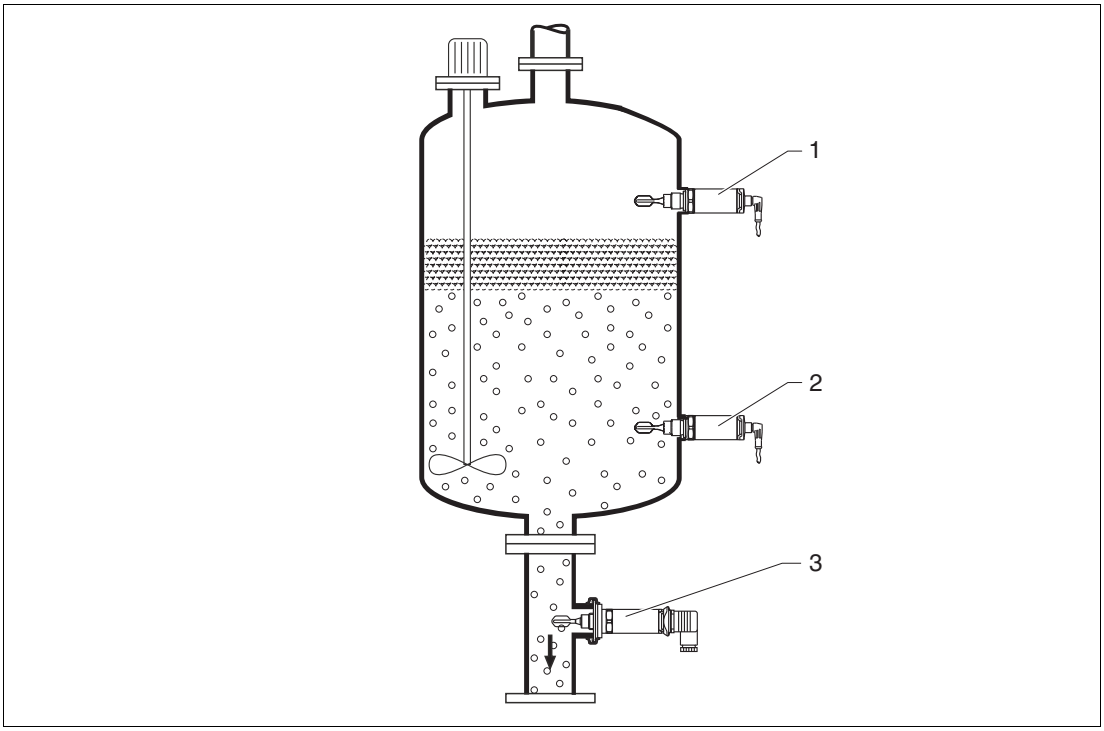

Figure 2.1

1 Overfill prevention or upper level detection MAX (maximum safety)

2 Lower level detection MIN (minimum safety)

3 Lower level detection MIN, e. g. dry running protection for pump

3 Input

3.1 Measured Variable

Density

3.2 Measuring Range

> 0.7 g/cm^3 (optionally available: > 0.5 g/cm^3)

4 Output

4.1 Switch Output

Switching behavior: On/Off

Function

- **3-wire DC-PNP:**
  Positive voltage signal at the switch output of the electronics (PNP), switching capacity 250 mA
- **2-wire AC/DC:**
  Load switching in the power supply line, switching capacity 250 mA

4.2 Operating Modes

The device has two operating modes: maximum safety (MAX) and minimum safety (MIN).

By choosing the corresponding operating mode, the user ensures that the device also switches in a safety-oriented manner even in an alarm condition, e. g. if the power supply line is disconnected.

- **Maximum safety (MAX)**
  The device keeps the electronic switch closed as long as the liquid level is below the fork.
  Sample application: overfill prevention
- **Minimum safety (MIN)**
  The device keeps the electronic switch closed as long as the fork is immersed in liquid.
  Sample application: Dry running protection for pumps

The electronic switch opens if the limit is reached, if a fault occurs or the power fails (quiescent current principle).

5 Power Supply

5.1 Supply Voltage

DC-PNP:	10 to 35 V DC, 3-wire
AC/DC:	20 to 253 VAC/DC, 2-wire

5.2 Power Consumption

DC-PNP:	< 975 mW
AC/DC:	< 850 mW

5.3 Current Consumption

DC-PNP:	< 15 mA
AC/DC:	< 3.8 mA

5.4 Residual Ripple

DC-PNP:	5 V_{ss} 0 to 400 Hz
AC/DC:	–

5.5 Electrical Connection

Two electronic versions and three different connections are available for the device. A fine-wire fuse is necessary for operation: 500 mA slow-blow.

Cable entry

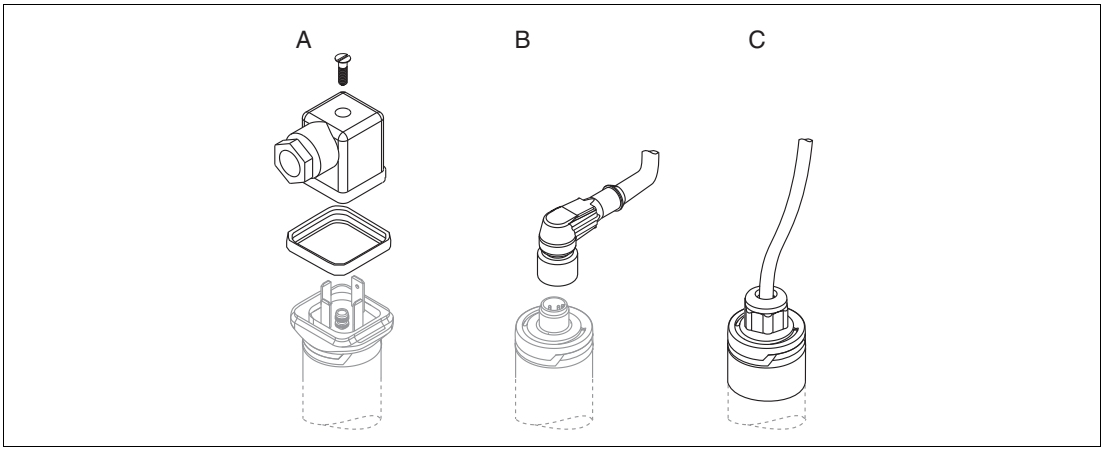

Figure 5.1

A Valve plug (M16 x 1.5, NPT1/2, QUICKON)

B M12 plug

C Cable 5 m (16 foot), captive when delivered, cannot be dismantled

Cable specification

- Valve plug
  - Cable cross-section: max. 1.5 mm^2 (AWG16)
  - Ø3.5 to 8 mm (0.14 to 0,26 inch)
- M12 plug: IEC 60947-5-2
- Cable (3LPE)
  - Cable cross-section: 0.75 mm^2 (AWG20)
  - Ø6 to 8 mm (0.24 to 0.31 inch)
  - Material: PUR

5.6 Electronic Version 3-Wire DC-PNP

3-wire DC-PNP is preferably used in conjunction with programmable logic controllers (PLC), DI modules as per EN 61131-2. Positive signal at the switch output of the electronics (PNP).

Voltage source: non-hazardous contact voltage or Class 2 circuit (North America).

M12 Plug

Depending on the analysis of the switch outputs, the device works in the MAX (maximum safety) or MIN (minimum safety) mode.

Note!

A cable is optionally available for order, see "Accessories" section, page 41.

Electrical connection	Operating mode	
M12 plug	MAX	MIN
	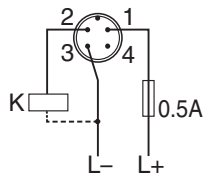	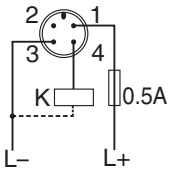
	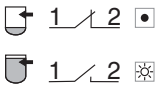	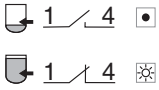
● Yellow LED (ye) not lit ☼ Yellow LED (ye) lit K external load		

Table 5.1

Function monitoring with M12 plug

Using a two-channel analysis, function monitoring of the sensor can be implemented in addition to level monitoring, e. g. per relay switch, PLC, …).

When both outputs are connected, the MIN and MAX outputs assume opposite states when the device is operating fault-free (XOR). In the event of an alarm condition or a line break, both outputs are de-energized.

Connection for function monitoring with antivalence			Yellow LED (ye)	Red LED (rd)
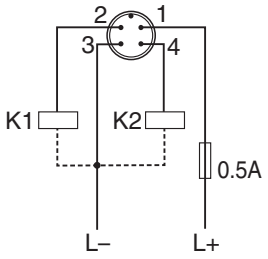	**Sensor covered**	1 2 1 4	☼	•
	Sensor exposed	1 2 1 4	•	•
	Fault	1 2 1 4	•	☼

☼ LED lit
• LED not lit
ϟ Fault or warning
K1/K2 external load

Table 5.2

Valve plug, cable

Depending on the assignment of the connector or the wiring of the cable, the device works in either the MAX or MIN operating mode.

Electrical connection	Operating mode	
Valve plug	MAX	MIN
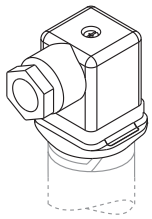	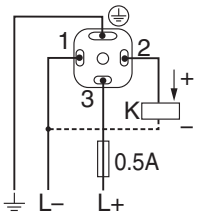	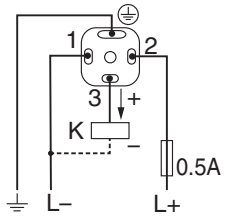
	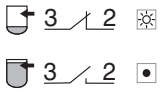	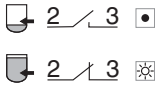
Cable (cannot be dismantled) Core colors: 1 = BK (black) 2 = GR (gray) 3 = BN (brown) Ground = GNYE (green-yellow)	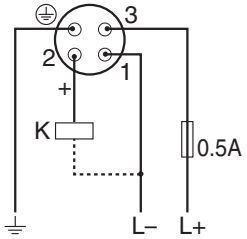	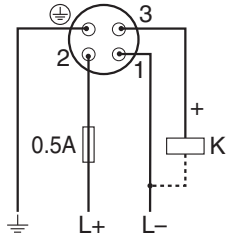
	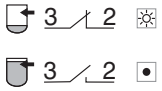	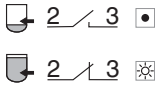
● Yellow LED (ye) not lit ☼ Yellow LED (ye) lit K external load		

Table 5.3

5.7 Electronic Version 2-Wire AC/DC

The load is switched via an electronic switch directly in the power supply circuit. Always connect in series with a load!

Not suitable for connection to low-voltage PLC inputs!

Selection tool for relays

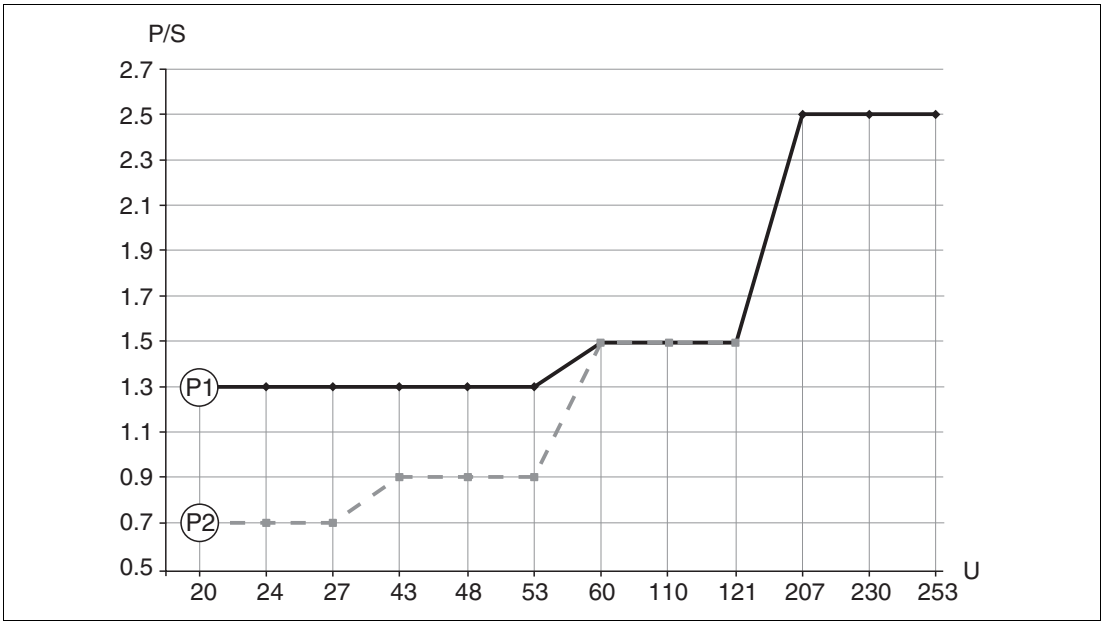

Figure 5.2 Minimum rated power of the load

P/S Rated power in [W]/[VA]

U Operating voltage in [V]

Position	Supply voltage	Rated power	
		min	max
P1 AC mode	24 V 110 V 230 V	> 1.3 VA > 1.5 VA > 2.5 VA	< 6 VA < 27.5 VA < 57.5 VA
P2 DC mode	24 V 48 V 60 V	> 0.7 W > 0.9 W > 1.5 W	< 6 W < 12 W < 15 W

Table 5.4

Relays with a lower rated power can be operated by means of an RC module connected in parallel (optional).

Valve plug, cable

Depending on the assignment of the connector or the wiring of the cable, the device works in either the MAX or MIN operating mode.

When the cable is wired, one wire of the cable does not have any function in each of the operating modes (brown in the case of MIN, and gray in the case of MAX). The cable with no function must be secured against inadvertent contact.

Electrical connection	Operating mode	
Valve plug	MAX	MIN
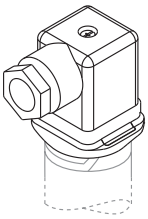	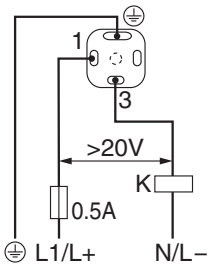	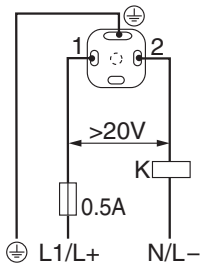
	1 3 ☼ 1 3 •	1 2 • 1 2 ☼
Cable (cannot be dismantled) 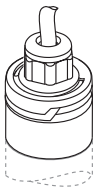 Core colors: 1 = BK (black) 2 = GR (gray) 3 = BN (brown) Ground = GNYE (green-yellow)	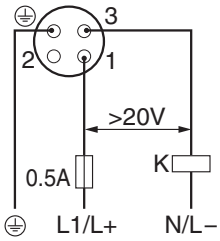	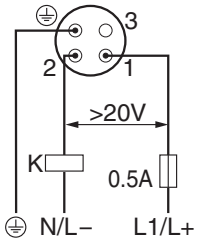
	1 3 ☼ 1 3 •	1 2 • 1 2 ☼
• Yellow LED (ye) not lit ☼ Yellow LED (ye) lit K external load		

Table 5.5

5.8 Overvoltage Protection

Overvoltage category II

6 Performance Characteristics

6.1 Reference Operating Conditions

Ambient temperature:	+25 °C (+77 °F)
Process pressure:	1 bar (14.5 psi)
Fluid:	Water (density: approx. 1 g/cm^3, viscosity 1mm^2/s)
Medium temperature:	25 °C (77 °F)
Density setting:	>0.7 g/cm^3
Switching time delay:	Standard (0.5 s, 1 s)

6.2 Switch Point

13 mm (0.51 inch) ±1 mm

6.3 Hysteresis

max. 3 mm (0.12 inch)

6.4 Non-Repeatability

±1 mm (0.04 inch) in accordance with DIN 61298-2

6.5 Influence of Ambient Temperature

Negligible

6.6 Influence of Medium Temperature

-25 µm (984 µinch)/°C

6.7 Influence of Medium Pressure

-20 µm (787 µinch)/bar

6.8 Switching Delay

- 0.5 s when tuning fork is covered
- 1.0 s when tuning fork is uncovered
- Optionally available: 0.2 s, 1.5 s or 5 s (when the tuning fork is covered and uncovered)

6.9 Switch-on Delay

max. 3 s

6.10 Measuring Frequency

approx. 1100 Hz in air

6.11 Measured Error

In event of device change: ±2 mm (0.08 inch) as per DIN 61298-2

7 Installation

7.1 Orientation

The limit switch can be installed in any position in a vessel, pipe or tank. Foam formation does not affect the function.

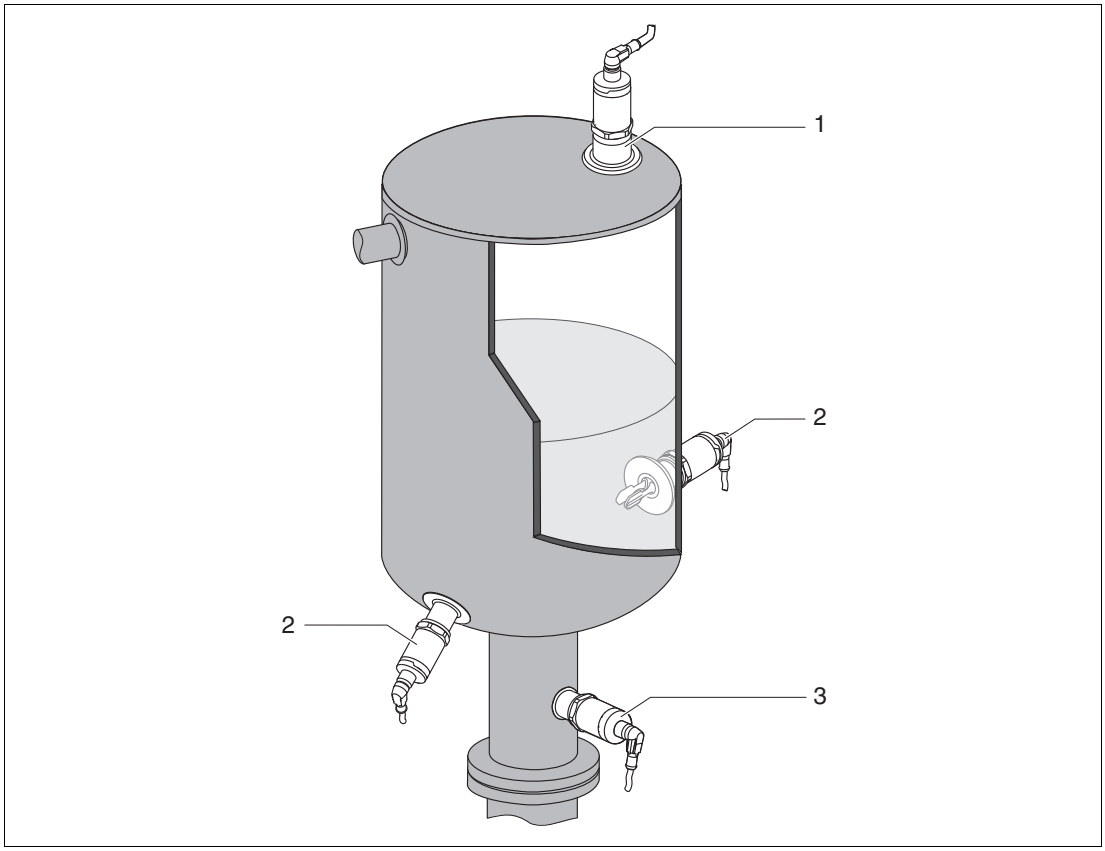

Figure 7.1 Installation options

1 Overfill prevention or upper level detection

2 Lower level detection

3 Dry running protection for pump

7.2 Installation Instructions

Switch Point

The switch point (A) on the sensor depends on the orientation of the limit switch (water +25 °C (+77 °F), 1 bar (14.5 psi).

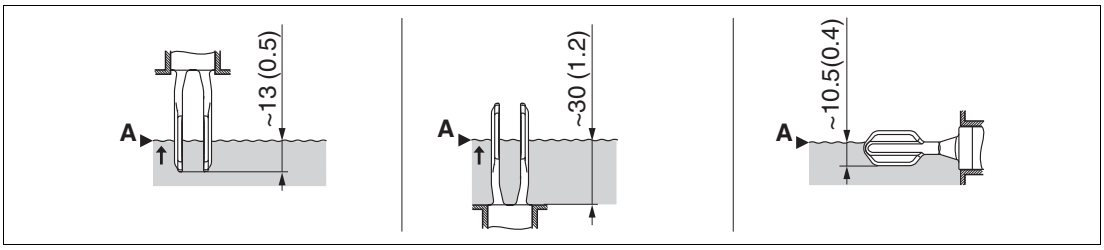

Figure 7.2 Vertical and horizontal orientation, dimensions in mm (inch)

Short Tube Version

The use of the short tube ensures that the switch point is at the same level as in the previous Vibracon LVL-T1 model when an identical thread is selected. In this way, the device can be replaced quickly and easily. Applies for process connections G1 weld-in adapter for flush-mounted installation, MNPT1 and R1.

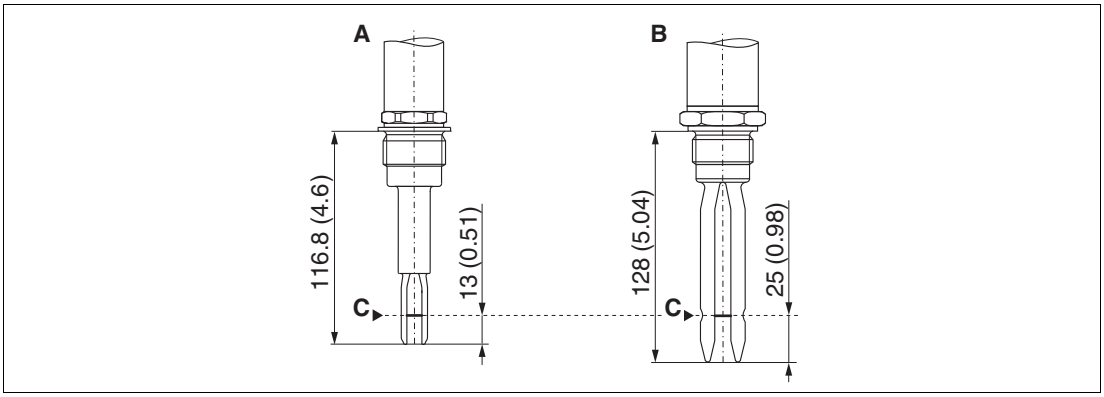

Figure 7.3

Dimensions mm (inch)

A Vibracon LVL-A7 with short tube

B Vibracon LVL-T1

C Switch point

Installation in Pipes

During installation, pay attention to the position of the fork in order to minimize turbulence in the pipe.

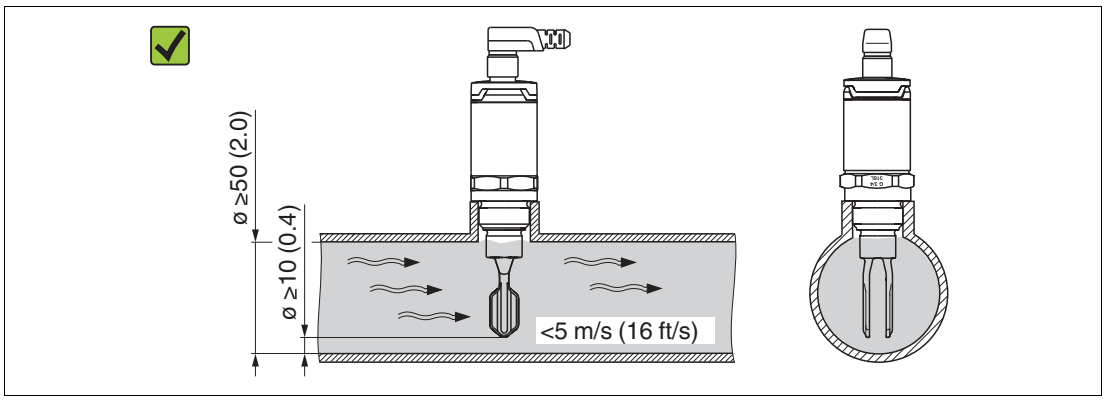

Figure 7.4

Dimensions mm (inch)

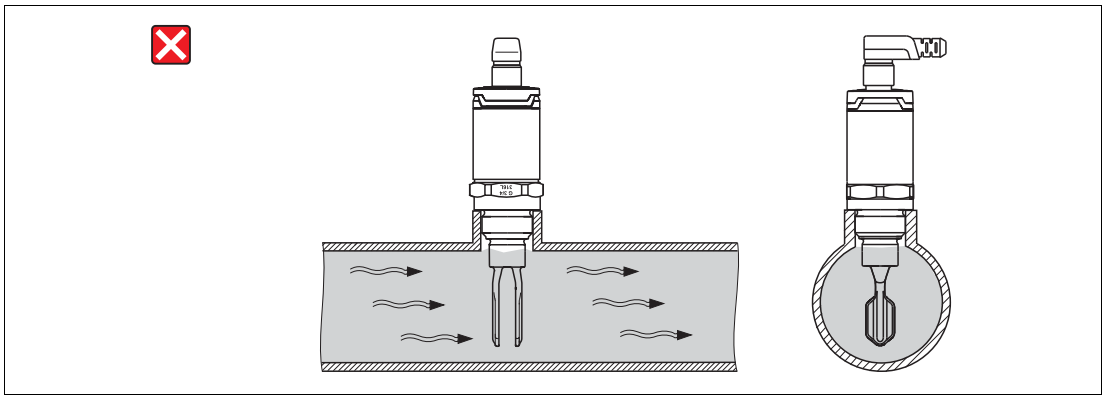

Figure 7.5

Installation in Vessels

If installed horizontally, pay attention to the position of the tuning fork to ensure that the liquid can drip off easily.

The electrical connection, e. g. plug M12, should be pointing down with the cable. This can prevent moisture from penetrating.

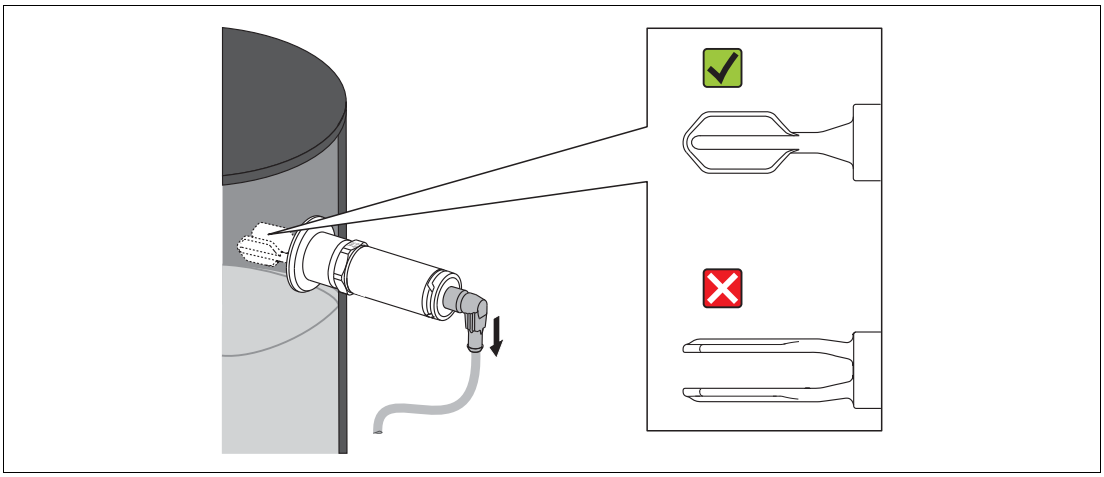

Figure 7.6 Position of the fork in the case of horizontal installation in a vessel

Distance from Wall

Ensure that there is sufficient distance between the expected buildup on the tank wall and the fork. Recommended distance from wall ≥ 10 mm (0.39 inch).

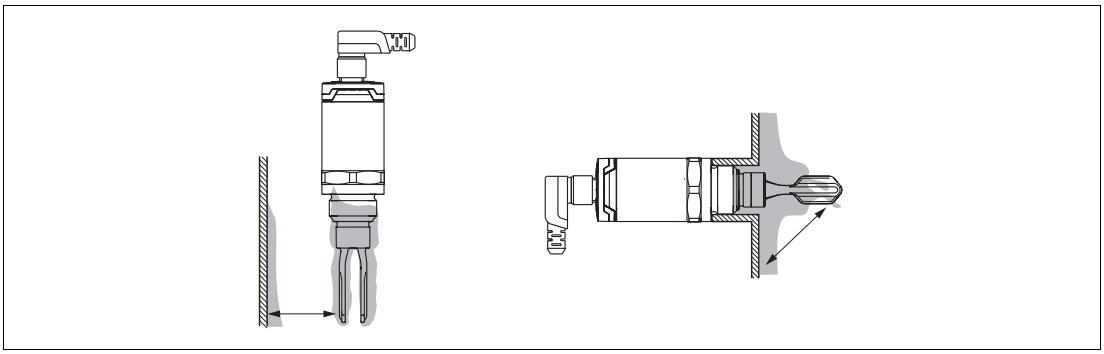

Figure 7.7

7.3 Length of Connecting Cable

- to 1000 m (3281 foot)
- max. 25 Ω/wire, total capacitance < 100 nF

8 Environment

8.1 Ambient Temperature

-40 to +70 °C (-40 to +158 °F)

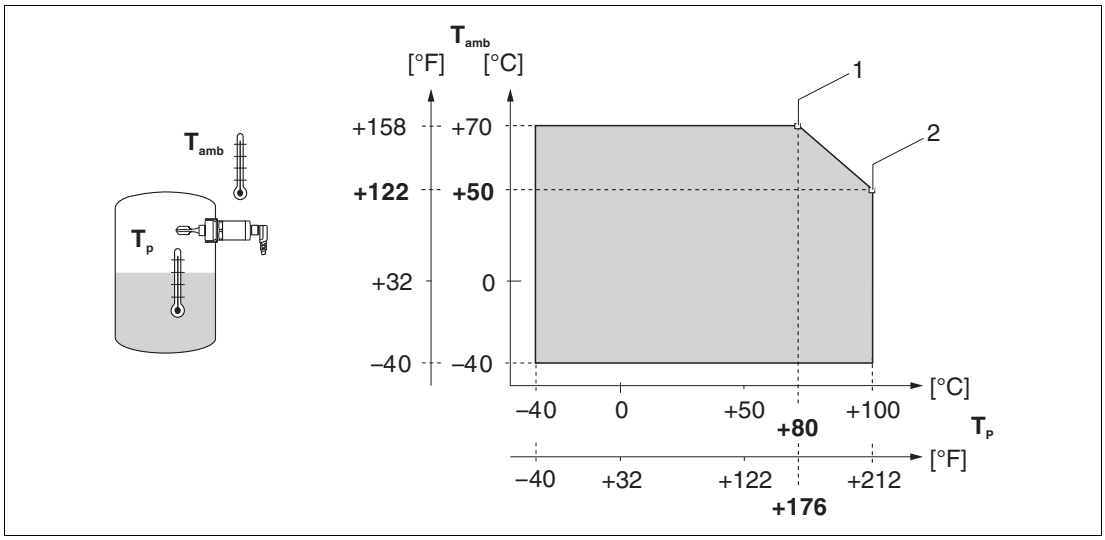

Figure 8.1 Derating curve: 100 °C (212 °F)

1 I_{max}: 250 mA (DC-PNP), 250 mA (AC/DC)

2 I_{max}: 150 mA (DC-PNP), 150 mA (AC/DC)

T_{amb} Ambient temperature

T_p Process temperature

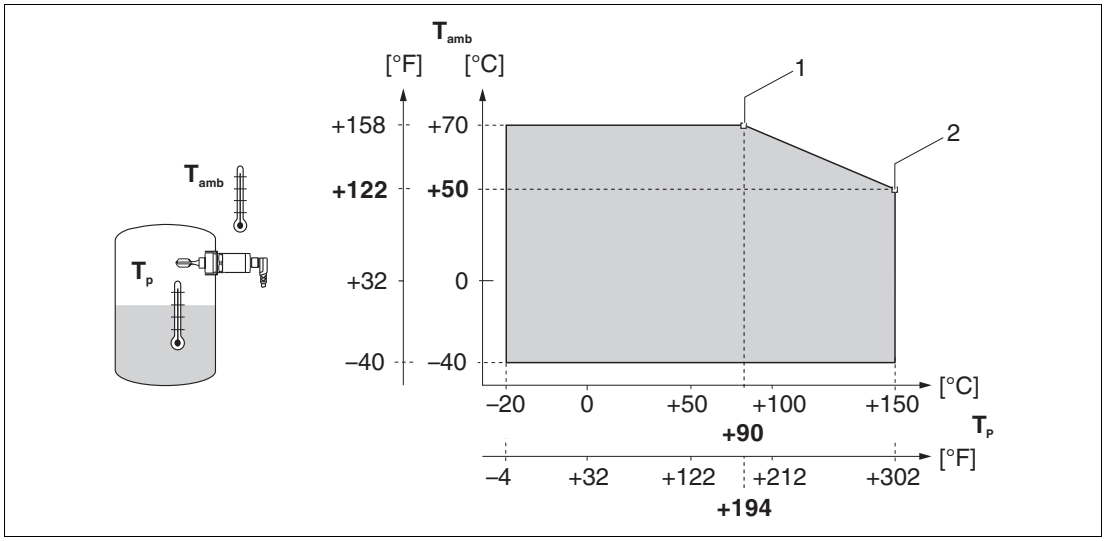

Figure 8.2 Derating curve: 150 °C (302 °F)

1 I_{max}: 250 mA (DC-PNP), 250 mA (AC/DC)

2 I_{max}: 150 mA (DC-PNP), 150 mA (AC/DC)

T_{amb} Ambient temperature

T_p Process temperature

8.2 Storage Temperature

-40 to +85 °C (-40 to +185 °F)

8.3 Climate Class

DIN EN 60068-2-38/IEC 68-2-38: test Z/AD

8.4 Altitude

Up to 2000 m (6600 foot) above sea level

8.5 Degree of Protection

- IP65/67, NEMA 4X enclosure (M12 plug)
- IP65, NEMA 4X enclosure (valve plug)
- IP65/68, NEMA 4X/6P enclosure (cable)

8.6 Shock Resistance

a = 300 m/s^2 = 30 g, 3 planes x 2 directions x 3 shocks x 18 ms, as per test Ea, prEN 60068-2-27:2007

8.7 Vibration Resistance

a(RMS) = 50 m/s^2, ASD = 1.25 (m/s^2)^2/Hz, f = 5 to 2000 Hz, t = 3 x 2 h, as per test Fh, EN 60068-2-64:2008

8.8 Electromagnetic Compatibility

Electromagnetic compatibility in accordance with all relevant requirements of the EN 61326 series and NAMUR recommendation EMC (NE21). For details, refer to the EC declaration of conformity. The EC declaration of conformity is available for downloading on the product detail page of Vibracon LVL-A7 under "Approvals+Certificates" available for downloading www.pepperl-fuchs.com.

8.9 Reverse Polarity Protection

2-wire AC/DC

- AC mode: the device has reverse polarity protection.
- DC mode: in the event of reverse polarity the maximum safety mode is always detected. Check the wiring and perform a function check before commissioning. The device is not damaged in the event of reverse polarity.

3-wire DC-PNP

Integrated. In the event of reverse polarity, the device is deactivated automatically.

8.10 Short-Circuit Protection

2-wire AC/DC

During switching the sensor checks whether a load, e. g. relay or contactor, is present (load check). If an error occurs, the sensor is not damaged.

Smart monitoring: normal operation is resumed once the error is fixed.

3-wire DC-PNP

Overload protection/short-circuit protection at I > 250 mA; the sensor is not destroyed.

Smart monitoring: check for overload in intervals of approx. 1.5 s; normal operation is resumed once the overload/short-circuit is fixed.

9 Process

Note!

Pay attention to the pressure and temperature derating depending on the selected process connection, see page 27.

9.1 Process Temperature Range

- -40 to +100 °C (-40 to +212 °F)
- -40 to +150 °C (-40 to +302 °F)

9.2 Process Pressure Range

max. -1 to +40 bar (-14.5 to +580 psi)

9.3 Density

> 0.7 g/cm^3 (optionally available: > 0.5 g/cm^3)

9.4 State of Aggregation

Liquid

9.5 Viscosity

1 to 10000 mPa·s, dynamic viscosity

9.6 Solids Contents

Ø < 5 mm (0.2 inch)

9.7 Lateral Loading Capacity

Lateral loading capacity of the tuning fork: maximum 200 N

10 Mechanical Construction

10.1 Design

Various versions of the limit switch are available, the features of which can be selected to suit your user needs.

The versions can be selected via the product structure, see the "Ordering Information" section, page 38. Examples can be seen in the following diagram:

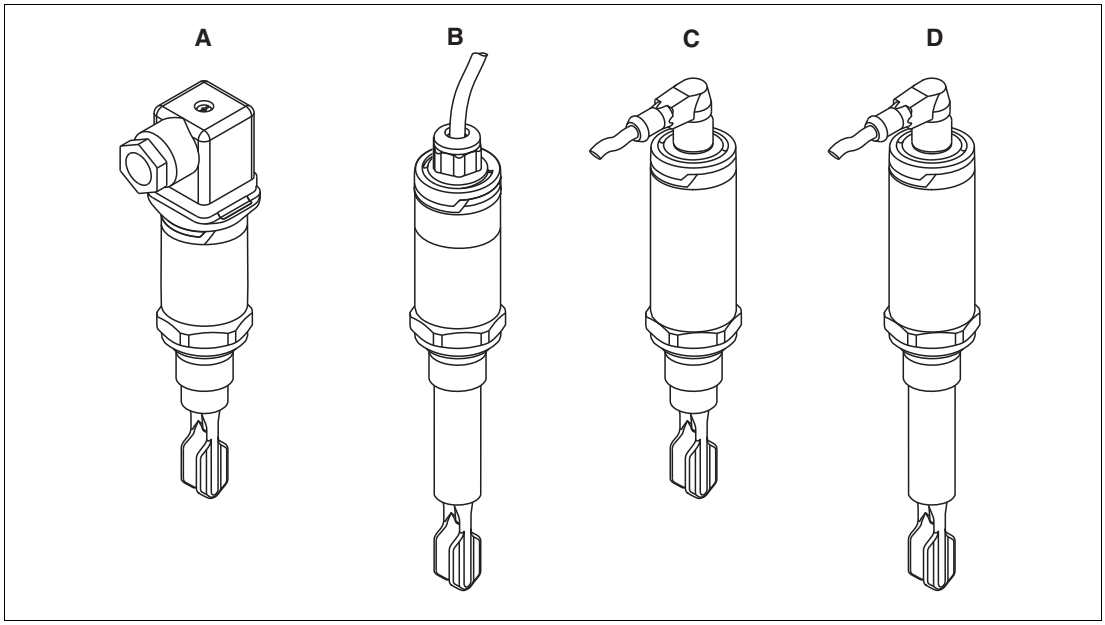

Figure 10.1

Versions	Examples			
	A	B	C	D
Electrical connection	Valve plug	Cable (cannot be dismantled)	M12 plug	M12 plug
Housing (sensor design) for process temperatures up to:	100 °C (212 °F)	100 °C (212 °F)	150 °C (302 °F)	150 °C (302 °F)
Sensor type	Compact version	Short tube version	Compact version	Short tube version

Table 10.1

Note!

Detailed information on the process connections is provided in the "Sensor Type" section, page 27.

Note!

Information on the short tube version is provided in the "Installation" section, page 19.

10.2 Connector

Dimensions

Dimensions mm (inch)

The following graphics illustrate the connectors together with the suitable housing covers on the housing of the device.

Electrical connection with housing cover		Designation
A 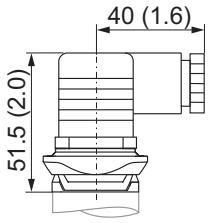	**B** 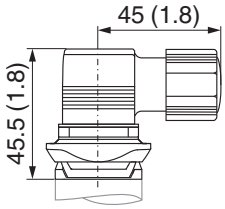	**A:** Valve plug M16, NPT1/2 for housing cover: PPSU plastic **B:** Valve plug QUICKON for housing cover: PPSU plastic
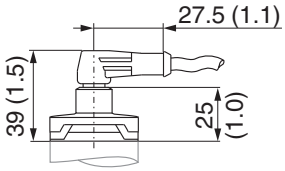		M12 plug for housing cover: PPSU plastic (IP65/67)
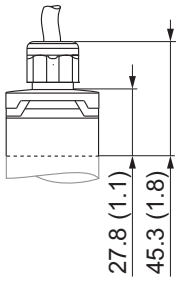		Captive cable with housing cover: PPSU plastic

Table 10.2

10.3 Tuning Fork

Dimensions

Dimensions mm (inch)

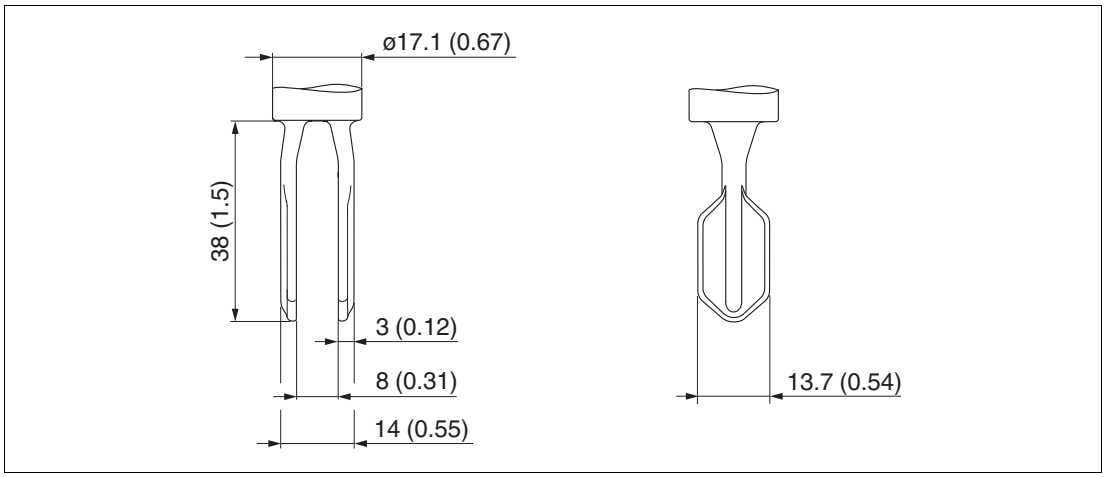

Figure 10.2

10.4 Sensor Type

Dimensions

Dimensions mm (inch)

The total dimensions of the device can vary depending on the connector selected. To determine the total dimensions, please refer also to the "Electrical Connection" section.

Information on the following tables

- Meaning of symbols:
  * Dimension for process temperature max. 100 °C (212 °F)
  ** Dimension for process temperature max. 150 °C (302 °F)
- If several versions have the same dimensions, one example of the compact version and one example of the short tube version is given.
- The versions in the second column refer to the process connections in the ordering information.

Dimensions	Version	Description
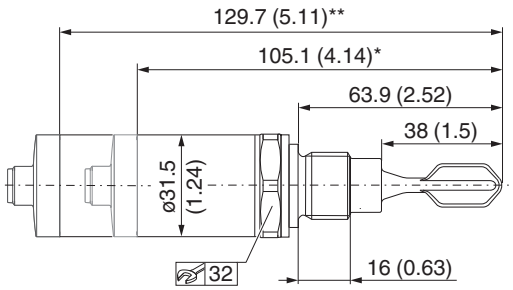 Compact version, example G1/2 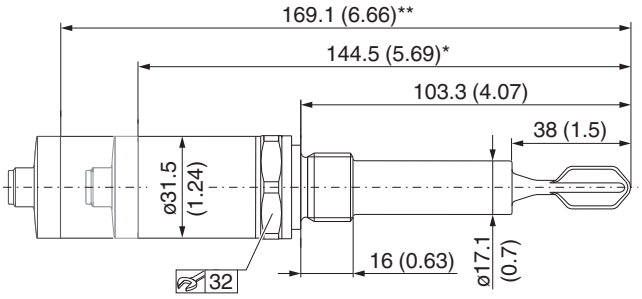 Short tube version, example G1/2	G1 G5	**Thread ISO 228 G1/2** **Thread ISO 228 G3/4** • Material: 316L • Scope of delivery: flat seal (FA) • Pressure and temperature (maximum): +40 bar (+580 psi) at +150 °C (+302 °F)
	G2	**Thread ISO 228 G3/4 for flush-mounted installation in weld-in adapter** • Material: 316L • Scope of delivery: flat seal (FA) Optional accessory: weld-in adapter • Scope of delivery: seal (VMQ) • Pressure and temperature (maximum): +25 bar (+362 psi) at +150 °C (+302 °F) +40 bar (+580 psi) at +100 °C (+212 °F) The dimensions apply for G1/2, G3/4 and G3/4 for flush-mounted installation.

Table 10.3

Dimensions	Version	Description
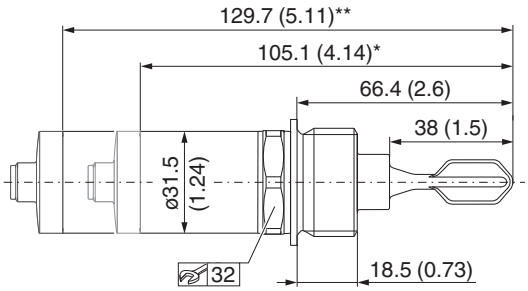 Compact version 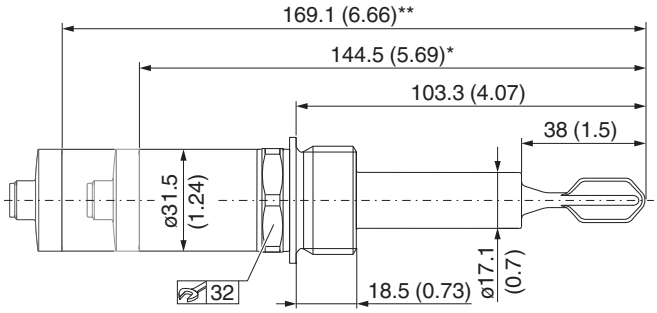 Short tube version	G3	**Thread ISO 228 G1** • Material: 316L • Scope of delivery: flat seal (FA) • Pressure and temperature (maximum): +40 bar (+580 psi) at +150 °C (+302 °F)

Table 10.4

Dimensions	Version	Description
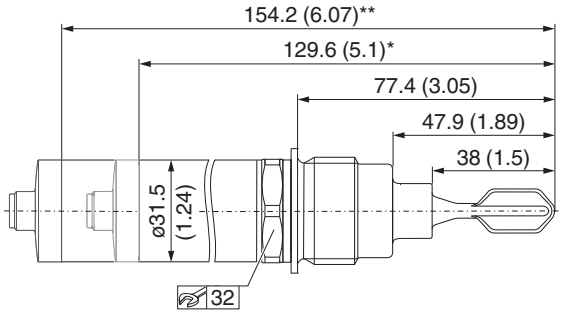 Compact version 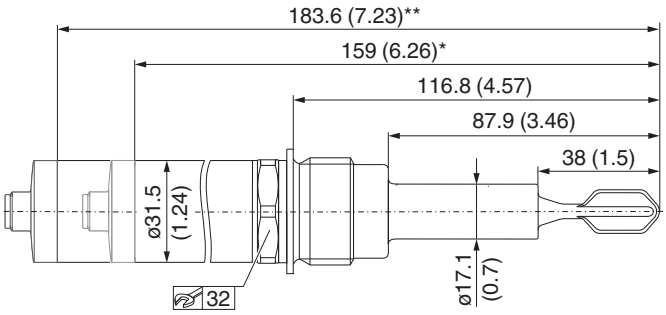 Short tube version	G4	**Thread ISO 228 G1 for flush-mounted installation in weld-in adapter** • Material: 316L • Scope of delivery: flat seal (FA) Optional accessory: weld-in adapter • Scope of delivery: seal (VMQ) • Pressure and temperature (maximum): +25 bar (+362 psi) at +150 °C (+302 °F) +40 bar (+580 psi) at +100 °C (+212 °F)

Table 10.5

Dimensions	Version	Description
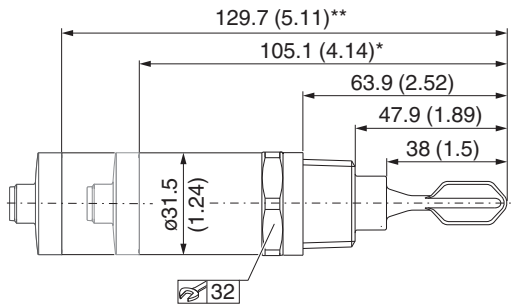 Compact version, example MNPT3/4 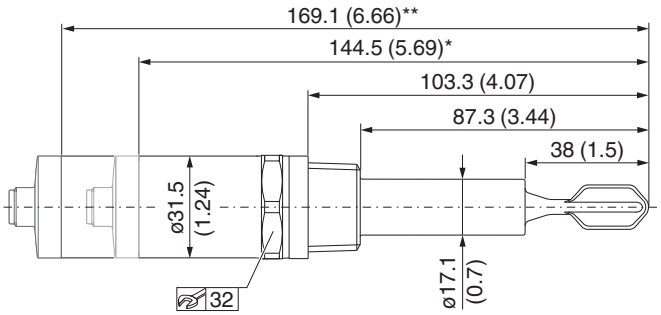 Short tube version, example MNPT3/4	N1 N2 R1 R2	**Thread ASME MNPT1/2** **Thread ASME MNPT3/4** **Thread EN 10226 R1/2** **Thread EN 10226 R3/4** • Material: 316L • Pressure and temperature (maximum): +40 bar (+580 psi) at +150 °C (+302 °F) The dimensions apply for MNPT1/2, MNPT3/4, R1/2 and R3/4.

Table 10.6

Dimensions	Version	Description
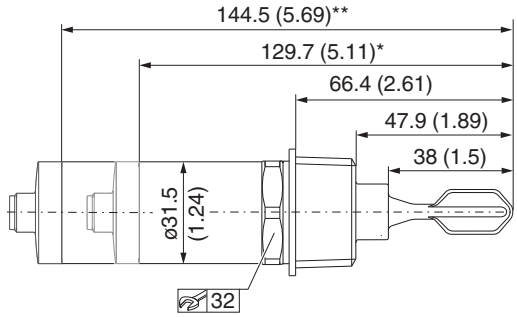 Compact version, example MNPT1 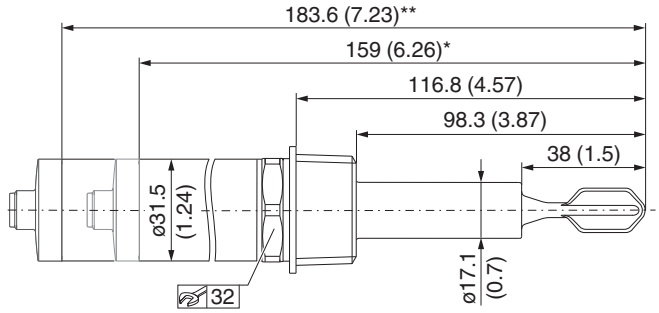 Short tibe version, example MNPT1	N3 R3	**Thread ASME MNPT1** **Thread EN 10226 R1** • Material: 316L • Pressure and temperature (maximum): +40 bar (+580 psi) at +150 °C (+302 °F) The dimensions apply for MNPT1 and R1.

Table 10.7

Note!

Pay attention to the temperature and pressure specifications for seals used at the customer site.

Note!

Pepperl+Fuchs supplies DIN/EN process connections with threaded connection in stainless steel in accordance with AISI 316L (DIN/EN material number 1.4404 or 14435). With regard to their stability-temperature property, the materials 1.4404 and 1.4435 are grouped together under 13E0 in EN 1092-1, table 18. The chemical composition of the two materials can be identical.

10.5 Weight

Sensor type	Weight
Compact version with process adapter G1/2 and valve plug for process temperature up to 100 °C (212 °F)	Approx. 140 g (4.938 oz)
Short tube version with process adapter G1/2 and valve plug for process temperature up to 150 °C (302 °F)	Approx. 169 g (5.961 oz)

Table 10.8

10.6 Materials

Material specifications in accordance with AISI and DIN EN.

Materials in Contact with Process

Component part	Material
Tuning fork	316L
Process adapter	316L (1.4404/1.4435)
Short tube	316L (1.4404/1.4435)
Seal for weld-in adapter with G3/4, G1	VMQ
Flat seal	FA (composite material based on aramid fibers combined with NBR)

Table 10.9

Materials not in Contact with Process

Component part	Material
Housing cover with M12 plug (IP65/67)	PPSU
Housing cover with valve plug (IP65)	
Housing cover with cable (IP65/68)	
Cable gland	PVDF
Design ring	PBT/PC
Housing	316L (1.4404/1.4435)
Nameplate	Plastic foil (attached to housing)

Table 10.10

10.7 Surface Roughness

Metallic surface in contact with process:

Ra ≤ 3.2 µm (126 µinch)

Note!
The surface is not defined in the area of the welding seam.

11 Operability

11.1 LED Display

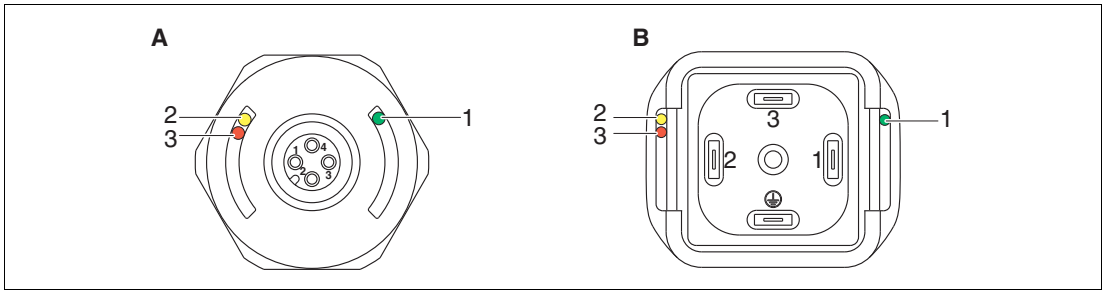

Figure 11.1

A M12 plug, (cable without graphic)

B Valve plug

Item	Function	Description
1	Green LED (gn) Lit	Device is operational
2	Yellow LED (ye) Lit	**M12 plug** Indicates the sensor state: tuning fork is covered by liquid **Valve plug/cable** Indicates the switching state: • MAX operating mode (overfill prevention): sensor is **not** covered by liquid • MIN operating mode (dry running protection): the sensor is covered by liquid
3	Red LED (rd) Flashing Lit	Warning/maintenance required: error can be rectified, e. g. incorrect wiring Fault/device failure: error cannot be rectified, e. g. electronic error

Table 11.1

11.2 Function Test with Test Magnet

To perform a function test, hold the test magnet against the marking on the nameplate (for at least 2 seconds). This inverts the current switching status and the yellow LED changes state. When the magnet is removed, the switching status valid at that time is adopted.

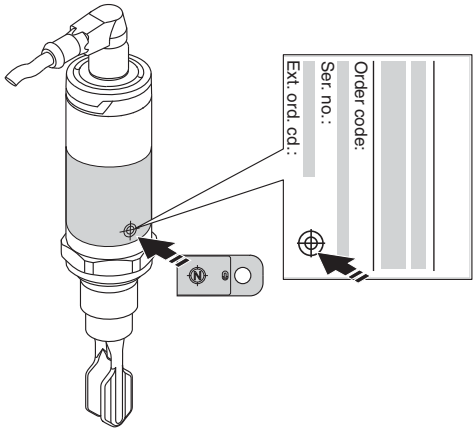

Figure 11.2 Test magnet and marking

12 Certificates and Approvals

Note!

The following documents are also available in the download area of the Pepperl+Fuchs website: www.pepperl-fuchs.com

12.1 CE Mark

The measuring system is in conformity with the statutory requirements of the applicable EC directives. These are listed in the corresponding EC declaration of conformity along with the standards applied.

Pepperl+Fuchs confirms successful testing of the device by affixing to it the CE mark.

12.2 Approval

CSA C/US General Purpose

12.3 Overfill Prevention

Note!

Prior to mounting the device, pay attention to the WHG approval documents. The documents can be found in the download area of the Pepperl+Fuchs website.

WHG

- Overfill detection system
- Leak detection system

12.4 Inspection Certificates

The following documents can be ordered with the device (optional):

- Acceptance test certificate as per EN 10204-3.1
- Final inspection report

12.5 Pressure Equipment Directive

The device does not fall within the scope of Pressure Equipment Directive 97/23/EC as it does not have a pressurized housing as defined in article 1, section 2.1.4 of the directive.

12.6 Other Standards and Guidelines

The applicable European guidelines and standards can be found in the relevant EU Declarations of Conformity.

13 Ordering Information

13.1 Product Structure

Note!

This overview does not mark options which are mutually exclusive.

Option with * = on request/in preparation

Device	
LVL-A7	Limit switch for liquids

Process temperature	
A	max. 100 °C (212 °F)
B	max. 150 °C (302 °F)

Process connection	
G1	Thread ISO 228 G1/2, 316L
G2	Thread ISO 228 G3/4, 316L, weld-in adapter installation accessory
G3	Thread ISO 228 G1, 316L
G4	Thread ISO 228 G1, 316L, weld-in adapter installation accessory
G5	Thread ISO 228 G3/4, 316L
N1	Thread ASME MNPT1/2, 316L
N2	Thread ASME MNPT3/4, 316L
N3	Thread ASME MNPT1, 316L
R1	Thread EN 10226 R1/2, 316L
R2	Thread EN 10226 R3/4, 316L
R3	Thread EN 10226 R1, 316L
XX	Special version

Sensor type	
A	Compact version 316L, Ra < 3.2 µm
B	Short tube version 316L, Ra < 3.2 µm
X	Special version

Electrical output	
E5	3-wire, 10 to 35 V DC, PNP
WA	2-wire, 19 to 253 V AC/DC

Electrical connection	
PC	Cable 5 m, IP65/68, NEMA 4X/6P
PN	Valve plug NPT1/2, ISO 4400, IP65, NEMA 4X
PS	Valve plug QUICKON, IP65, NEMA 4X
PU	Valve plug M16, ISO 4400, IP65, NEMA 4X
V1	Plug M12, IP65/67, NEMA 4X
XX	Special version

Approval	
CG	CSA C/US General Purpose
NA	Version for non-hazardous area

13.2 Additional Options

Note!

Option with * = on request/in preparation

Feature with ** = multiple options can be selected

Service **	
S1	Cleaned from oil and grease
S2	Density setting > 0.5 g/cm^2
S3	Switching delay setting
S4	Special service

Test, certificate **	
S5	Material certificate, wetted metallic parts, EN 10204-3.1 inspection certificate
S6	Final inspection report
XX	Special version

Additional approval	
WH	WHG overfill prevention, certificate copy

Accessory enclosed	
ST	Test magnet
SZ	Special version

Accessory optional	
PA	Weld-in adapter G3/4, d = 50, 316L, vessel installation
PB	Weld-in adapter G3/4, d = 50, 316L, vessel installation, EN 10204-3.1 inspection certificate
PC	Weld-in adapter G3/4, d = 29, 316L, pipe installation
PD	Weld-in adapter G3/4, d = 29, 316L, pipe installation, EN 10204-3.1 inspection certificate
PE	Weld-in adapter G1, d = 60, 316L, vessel installation
PF	Weld-in adapter G1, d = 60, 316L, vessel installation, EN 10204-3.1 inspection certificate
PG	Weld-in adapter G1, d = 53, 316L, pipe installation
PH	Weld-in adapter G1, d = 53, 316L, pipe installation, EN 10204-3.1 inspection certificate
RZ	Socket plug M12, elbowed 90 °, IP67, 5 m cable, slotted-nut Cu Sn/Ni
R1	Socket plug M12, IP67, slotted-nut Cu Sn/Ni
R5	Assembly socket wrench

Marking	
S9	Tagging (TAG), see additional specifications

14 Accessories

14.1 Included Accessories

Test magnet	Description
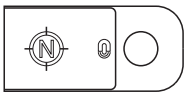	Information is available on page 35.

Table 14.1

14.2 Optional Accessories

Weld-in Adapter

Various weld-in adapters are available for installation in vessels or pipes.

Note!

The adapters are optionally available with inspection certificate 3.1 EN 10204.

View (example)	Description	
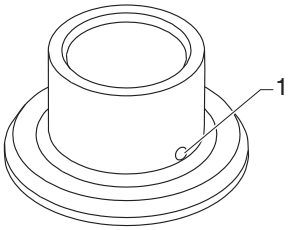 **1** Leakage hole	**G3/4**	Ø29 pipe installation Ø50 vessel installation FDA-listed materials as per 21 CFR Part 175-178
	G1	Ø53 pipe installation Ø60 vessel installation

Table 14.2

If installed horizontally and weld-in adapters with a leakage hole are used, ensure that the leakage hole is pointing down. This allows leaks to be detected as quickly as possible.

Socket Plug, Cable

Note!

The socket plugs listed are suitable for use in the temperature range -25 to +70 °C (-13 to +158 °F).

Engineering unit mm (inch)

Socket plug M12 IP67	Description
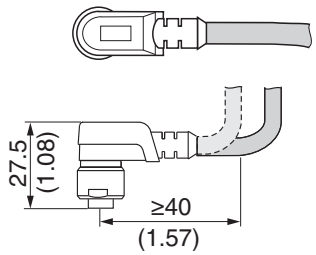	• elbowed 90° • 5 m (16 foot) cable PVC (gray) • Slotted nut Cu Sn/Ni • Body: PUR (blue)

Table 14.3

Socket plug M12 IP67	Description
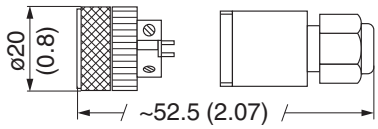	• Self-terminated connection to M12 plug • Slotted nut Cu Sn/Ni • Body: PBT

Table 14.4

Wire colors for M12 plug: 1 = BN (brown), 2 = WT (white), 3 = BU (blue), 4 = BK (black)

Additional Accessories

Socket wrench for mounting	Description
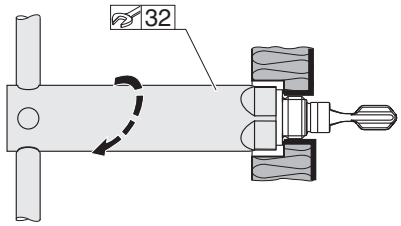	• Hexagonal • Size across flats AF32

Table 14.5

15 Documentation

Note!

The following document types are available in the download area of the Pepperl+Fuchs web site: www.pepperl-fuchs.com.

Document type	Document code
Technical information	TI01147O/98/EN
Manual	BA01285O/98/EN
Certificates	ZE01010O/98/EN, overfill prevention
	ZE01011O/98/EN, leaks

Table 15.1

PROCESS AUTOMATION – PROTECTING YOUR PROCESS

Worldwide Headquarters
Pepperl+Fuchs GmbH
68307 Mannheim · Germany
Tel. +49 621 776-0
E-mail: info@de.pepperl-fuchs.com

TI01147O/98/EN/02.14

For the Pepperl+Fuchs representative
closest to you check www.pepperl-fuchs.com/contact

www.pepperl-fuchs.com

PEPPERL+FUCHS
PROTECTING YOUR PROCESS

Subject to modifications
Copyright PEPPERL+FUCHS • Printed in Germany

DOCT-4838B
01/2016