Planar LookThru Series
TRANSPARENT LCD DISPLAYS

With Planar's transparent LCD technology, contained glass can have all the benefits of interactive digital signage while allowing consumers to see the product. The Planar® LookThru™ Series uses Planar's proprietary, Ultimate Color Illumination and Contrast (UCIC™), technology for amazing color, contrast and transparency. This technology maximizes transparency while delivering vibrant colors that delight the discerning eye of brand managers. The heat-strengthened front glass is optically bonded to the transparent LCD using Planar's ERO™(Extended Ruggedness and Optics) technology to create a highly durable display and accommodates touchscreen usage in interactive applications. Planar LookThru Series is ideal for retail merchandising, corporate displays, museum exhibits, award or trophy cases in education or corporate settings, tradeshow exhibits and a wide range of other architectural applications.

Planar LookThru Display Box

The Planar LookThru Display Box (TD3200) features an eye-catching 32" Planar LookThru transparent LCD front surface that provides a display surface for messaging while featuring actual product inside the box, in portrait or landscape orientation. The Planar LookThru Display Box's 32" screen size is large enough to display a wide variety of merchandise or artifacts while providing a spacious see–through display surface for digital signage messaging without obstructing the view of the product.

Planar LookThru Open Frame Installation Kit

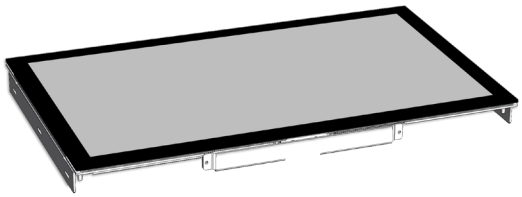

The Planar LookThru Open Frame Installation Kit (LT3200) is a high performance 32" open frame transparent LCD display for use in customer-designed enclosures. The Planar LT3200 allows for the easy integration of a 32" transparent LCD display into a custom fixture. The contemporary bezel free design and Planar–modified high resolution LCD provide extraordinary eye–catching transparent display performance with best–in–class optical clarity, color saturation, contrast and opacity.

Planar LookThru Display Box (TD3200)

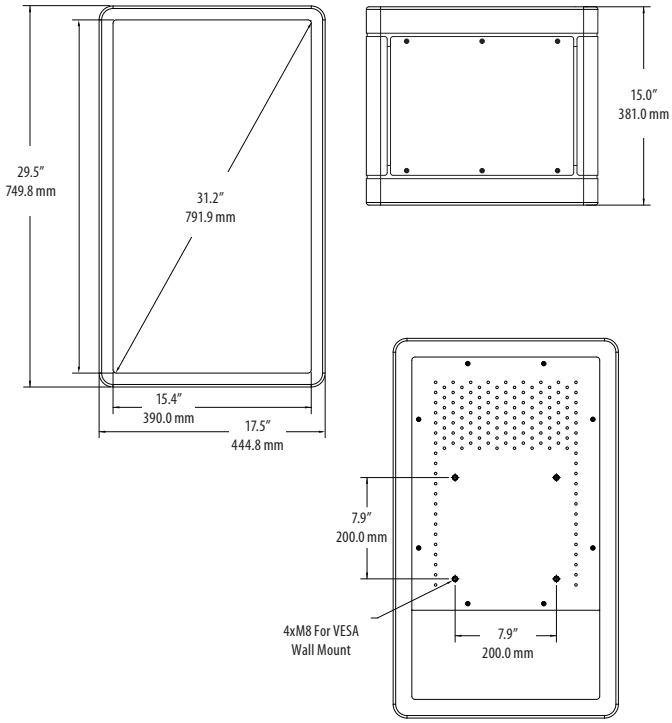

Planar LookThru Open Frame Installation Kit (LT3200)

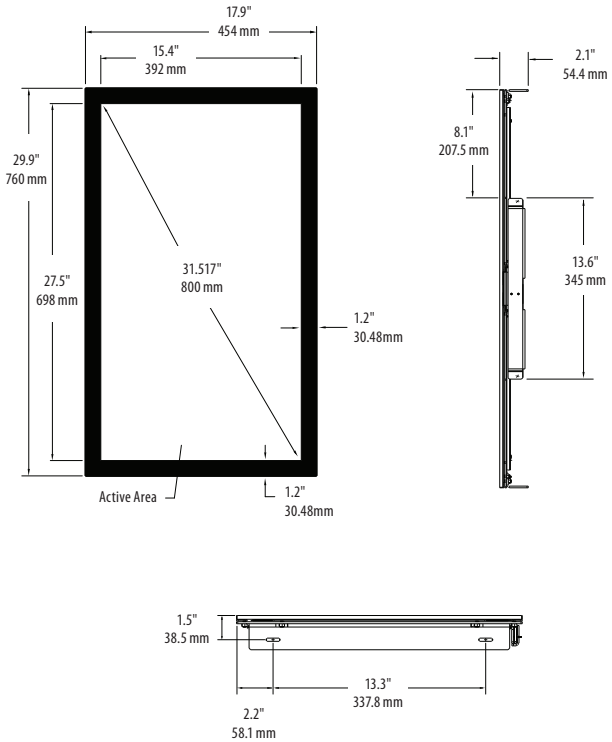

PLANAR LOOKTHRU SERIES SPECIFICATIONS

Model Name	TD3200	LT3200
Viewable Size	31.5" Diagonal	
Orientation	Portrait or Landscape	
Viewing Angle *(Typical)*	178° Horizontal and Vertical	
Response Time *(G-to-G, Typical)*	8 msec	
Display Type	LCD Active Matrix Flat Panel Display (TFT)	
Display Resolution	1366 x 768	
Aspect Ratio	16:9	
Palette	16.7 million colors	
Pixel Pitch	0.511 mm	
Refresh Rate	50 to 60 Hz	
Video Inputs	Digital (HDMI) and Display Port	
Compatibility	Windows® XP, Vista, and 7; Linux, MAC	
Power Supply	External AC adapter	
Power Requirements	100-240 VAC (50/60 Hz)	
Power Consumption	125W	
Service and Support	3-Year Customer First™ Warranty featuring	
Product Approvals	NRTL Listed, FCC-Class A, CE, RoHS	
Contrast Ratio *(Typical)*	>1000:1	Contrast is in part determined by display brightness and this will be determined by the design of the enclosure
Brightness *(Typical)*	350 cd/m^2	Determined by enclosure design
Dimensions *(W x H x D)*	29.5" x 17.5" x 15.0"	29.9" x 17.8"
Interior Dimensions *(W x H x D)*	27.25" x 15.25" x 13.5"	NA
Access Door Dimension	24.2" x 8.8"	NA
Display Weight *(w/o stand)*	Display Weight - 49 lbs (22.3 kg) Shipping Weight - 56.1 lbs |(25.7 kg)	Display Weight - 12.2 lbs (5.55 kg) Shipping weight - 33.0 lbs (15.0 kg)
VESA Compatible/Location	Built-in 200 x 200 mm VESA, back	NA The customer determines the enclosure mounting.

PLANAR®

When image experience matters.

www.planar.com
sales@planar.com
1-866-475-2627

Planar is a trademark of Planar Systems, Inc. All other trade and service marks are the property of their holders.

Copyright© 2013 Planar Systems, Inc. All rights reserved. This document may not be copied in any form without written permission from Planar Systems, Inc. Information in this document is subject to change without notice. 2/13