Model Number

LS680-DA-EN/F2

Optical data coupler

Features

- Fast Ethernet
- Independent of Ethernet protocol
- Plug connection for fast mounting
- No parameterization
- Line indicator for signal strength

Laserlabel

LASER RADIATION
DO NOT VIEW DIRECTLY
WITH OPTICAL INSTRUMENTS
CLASS 1M LASER PRODUCT

Product information

The optical data coupler serves as a connection of Ethernet modules to remote modules. These can move along an axis toward each other. The devices are optimized for conditions in high bay warehouses bays.
The physical transfer takes place protocol-free with 100 MBit/s full duplex. The data rate remains constant irrespective of distance. Telegrams are not saved, which enables immediate transfer.

Dimensions

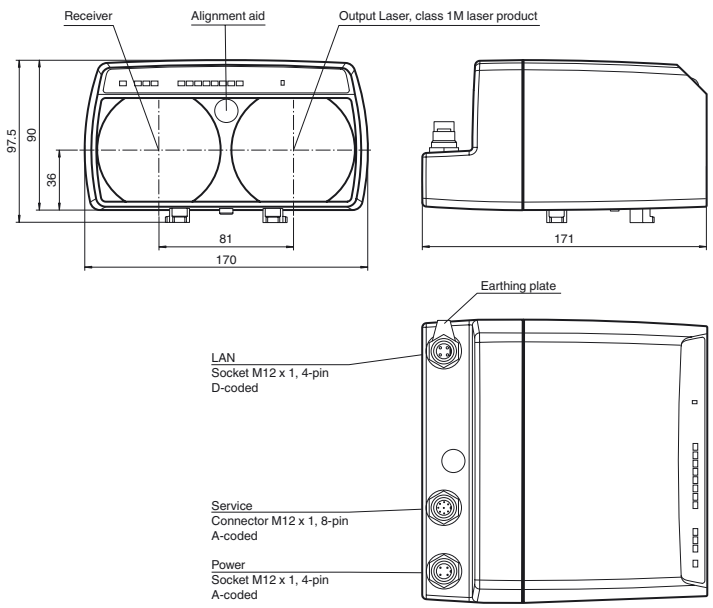

Electrical connection

Indicators/operating means

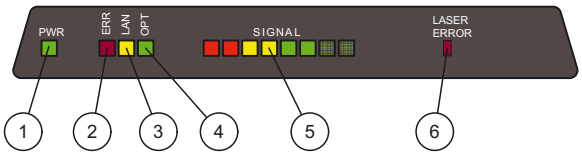

1	Operating indicator	green
2	Failure	red
3	LAN link	yellow
4	Opto link	green
5	Signal quality	
6	Error Laser	red

Release date: 2010-12-16 15:55 Date of issue: 2011-02-17 215544_ENG.xml

Technical data

General specifications		
Effective detection range		0 ... 150 m
Threshold detection range		180 m
Light source		laser diode
Light type		modulated visible red light
Laser nominal ratings		
Note		INVISIBLE LASER RADIATION , DO NOT VIEW DIRECTLY WITH OPTICAL INSTRUMENTS
Laser class		1M
Wave length		660 nm
Beam divergence		15 mrad
Pulse length		8 ns
Repetition rate		62.5 MHz
Maximum optical power output		60 mW
Diameter of the light spot		1.5 m at a distance of 100 m
Angle of divergence		1 °
Ambient light limit		> 10000 Lux
Functional safety related parameters		
$MTTF_d$		58.6 a
Mission Time (T_M)		10 a
Diagnostic Coverage (DC)		0 %
Indicators/operating means		
Data flow display		LED green: OPTO-Link LED yellow: LAN-Link
Function display		Signal strength (8 LED: Red, yellow, green)
Electrical specifications		
Operating voltage	U_B	18 ... 30 V DC
No-load supply current	I_0	200 mA
Data rate		100 MBit/s (Fast Ethernet)
Interface		
Interface type		100 BASE-TX
Output		
Output of the pre-fault indication		1 PNP, inactive when falling short of the stability control , short-circuit protected, max. 200 mA
Ambient conditions		
Ambient temperature		-10 ... 50 °C (14 ... 122 °F)
Storage temperature		-20 ... 70 °C (-4 ... 158 °F)
Mechanical specifications		
Protection degree		IP65
Connection		4-pin, M12x1 connector, standard (supply) , 8-pin M12x1 connector, service , M12x1 socket, 4-pin, D-coded (LAN)
Material		
Housing		ABS / PC
Optical face		plastic
Mass		700 g
Compliance with standards and directives		
Directive conformity		EMC Directive 2004/108/EC
Standard conformity		
Standards		EN 61000-6-2 , EN 61000-6-4 , EN 60825-1

Function

The LS680-DA-EN is a device for serial data transfer in Ethernet systems. One F1 and one F2 device is needed for each data transfer link.

Data transfer

Data is transferred in both directions by means of modulated light. The information at the input interface is modulated on the carrier signal. The information is then demodulated and issued on the output interface by the receiver.

Function displays/function reserve

A red alignment LED, which can be seen from a long way off, is located on the front panel as an alignment aid. As soon as a receiver detects the transmitter light of the device opposite it, the flashing frequency of the alignment aid decreases. If the light goes out, this indicates that the devices are optimally aligned and sufficient function reserve is available. For fine adjustment, the optical data coupler also features a bar graph display (signal display) that facilitates optimum alignment.

Accessories

OMH-LS610-01
Mounting bracket for optical data coupler

OMH-LS610-02
Direct mounting set consisting of 4 x M4 threaded inserts

OMH-LS610-03
Mounting bracket with deviation mirror for optical data coupler

Additional accessories can be found in the Internet.

Release date: 2010-12-16 15:55 Date of issue: 2011-02-17 215544_ENG.xml

Subject to modifications without notice
Copyright Pepperl+Fuchs
Pepperl+Fuchs Group
www.pepperl-fuchs.com
USA: +1 330 486 0001
fa-info@us.pepperl-fuchs.com
Germany: +49 621 776-4411
fa-info@pepperl-fuchs.com
Singapore: +65 6779 9091
fa-info@sg.pepperl-fuchs.com
PEPPERL+FUCHS
SENSING YOUR NEEDS

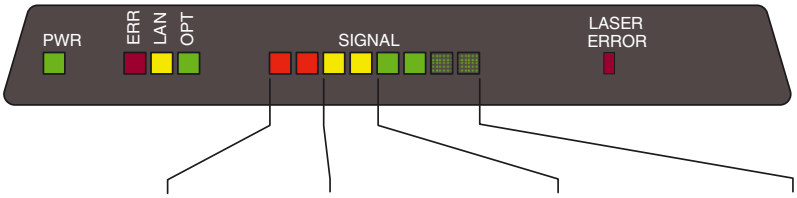

State	weak signal	sufficient signal strength	signal with function reserve
Transmission	blocked	released	transmission with function reserve
Alignment-LED	fast flashing	slow flashing	off
Signal-indicator	red area	yellow area (at least one LED)	green area

Mounting

The device is mounted using appropriate accessories, e.g., OMH-LS610-01 for wall mounting.
The x-y adjuster is pre-assembled on delivery. It is fixed in the required beam direction (±90° rotation possible) on the mounting bracket.

Laser notice laser class 1M

- The irradiation can lead to irritation especially in a dark environment. Do not point at people!
- Caution: visible and invisible laser radiation, do not observe laser light with optical instruments such as magnifying glasses, microscopes, telescopes or binoculars!
- Maintenance and repairs should only be carried out by authorized service personnel!
- Attach the device so that the warning is clearly visible and readable.

Release date: 2010-12-16 15:55 Date of issue: 2011-02-17 215544_ENG.xml