Model Number

LS611-DA-P

Optical data coupler

Features

- Devices for PROFIBUS
- Identical units communicate with each other
- Problem-free light beam interruption due to TVT (Telegram Verification Technology)
- Plug connection for fast mounting
- Simple programming without opening the device
- Usable up to detection range 0
- Line indicator for signal strength

Dimensions

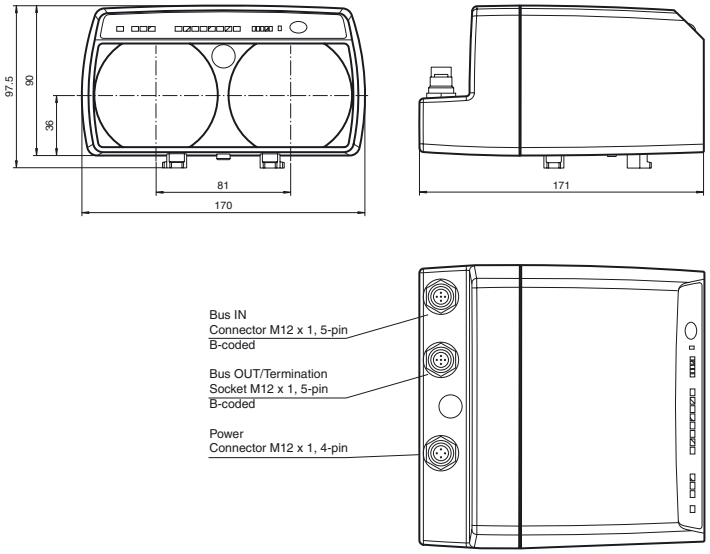

Electrical connection

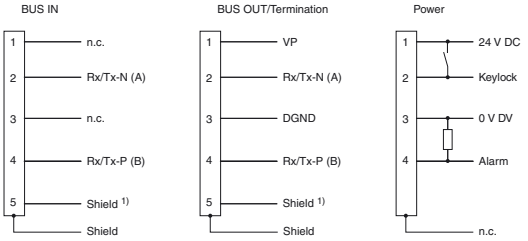

1) According to the "PROFIBUS Mounting Recommendations", the connection of the screen with Pin 5 is not recommended. If necessary, this type connection should be chosen if the contact of the screen cannot be established by screwing it to the plug housing.

Release date: 2011-02-21 15:36 Date of issue: 2011-02-21 131631_ENG.xml

Technical data

General specifications		
Effective detection range		0 ... 150 m
Threshold detection range		200 m
Light source		IRED
Light type		modulated infrared light
Diameter of the light spot		2 m at a distance of 100 m
Angle of divergence		1.2 °
Ambient light limit		> 10000 Lux
Functional safety related parameters		
$MTTF_d$		240 a
Mission Time (T_M)		20 a
Diagnostic Coverage (DC)		0 %
Indicators/operating means		
Data flow display		LED green: emitter LED yellow: receiver LED red: faulty telegram
Function display		alignment aid: flashing front red LED Signal strength (8 LED: Red, yellow, green) Baud rate , C1CP (collision protection)
Electrical specifications		
Operating voltage	U_B	18 ... 30 V DC
No-load supply current	I_0	200 mA
Data rate		93.75/187.5/500/1500 kBit/s , adjustable
Operation frequency		8.25 MHz
Interface		
Interface type		PROFIBUS DP-V0,-V1,-V2; FMS; MPI; FMS-DP mixed mode; galvanically isolated
Input		
Function input		Keyboard disabling, digital input (current sinking), closed ON
Output		
Output of the pre-fault indication		1 PNP (switches if there is sufficient stability control) short-circuit protected, max. 200 mA
Ambient conditions		
Ambient temperature		-10 ... 50 °C (14 ... 122 °F)
Storage temperature		-20 ... 70 °C (-4 ... 158 °F)
Mechanical specifications		
Protection degree		IP65
Connection		4-pin, M12x1 connector, standard (supply) , 5-pin, M12x1 connector, B-coded (Bus In) , 5-pin, M12x1 socket, B-coded (Bus Out/Termination)
Material		
Housing		ABS / PC
Optical face		plastic
Mass		700 g
Compliance with standards and directives		
Standard conformity		
Product standard		EN 60947-5-2:2007
Standards		EN 61000-6-2
Approvals and certificates		
UL approval		cULus Listed

Curves/Diagrams

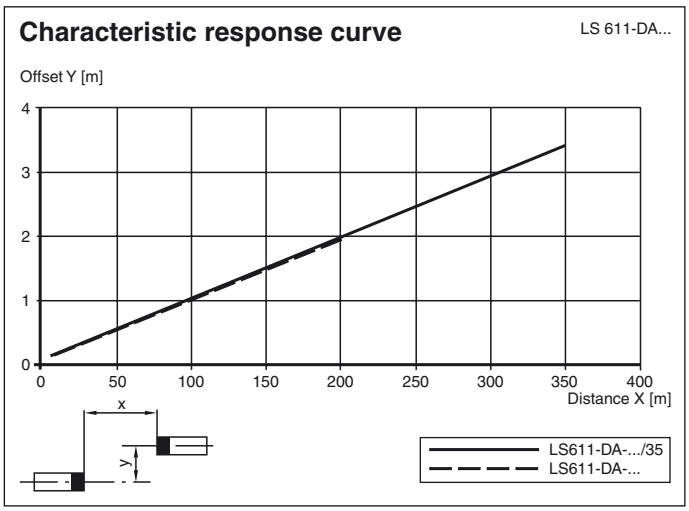

Accessories

ICZ-TR-V15B
Terminal resistor for PROFIBUS

V15-G-PG9
Cable socket, M12, 5-pin, ready for assembly

V15B-G
Cable socket, M12, for PROFIBUS, adjustable

V15SB-G
Cable connector, M12, for PROFIBUS, adjustable

Schutzkappe LS610 Zubehoer
M12 protective cap set (connector + socket) for series LS610 / LS611

Funktionserdung LS610/VDM100 Zubehoer
Function grounding for LS610 / LS611 / VDM100 series

OMH-LS610-01
Mounting bracket for optical data coupler

OMH-LS610-02
Direct mounting set consisting of 4 x M4 threaded inserts

OMH-LS610-03
Mounting bracket with deviation mirror for optical data coupler

OMH-LS610-04

OMH-LS610-31
Mounting bracket for optical data coupler and distance measurement devices

OMH-LS610-32
Mounting bracket for optical data coupler and distance measurement devices

Other suitable accessories can be found at www.pepperl-fuchs.com

Release date: 2011-02-21 15:36 Date of issue: 2011-02-21 131631_ENG.xml

Subject to modifications without notice
Copyright Pepperl+Fuchs
Pepperl+Fuchs Group www.pepperl-fuchs.com
USA: +1 330 486 0001 fa-info@us.pepperl-fuchs.com
Germany: +49 621 776-4411 fa-info@pepperl-fuchs.com
Singapore: +65 6779 9091 fa-info@sg.pepperl-fuchs.com
PEPPERL+FUCHS SENSING YOUR NEEDS

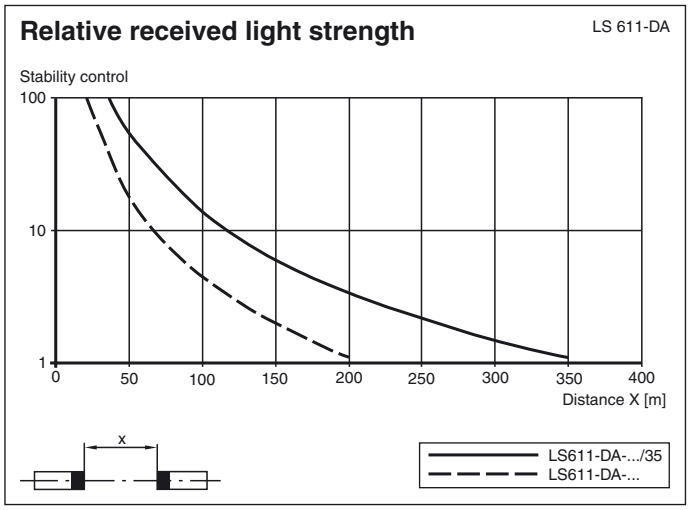

Function

The LS611-DA-P is a device for serial data transfer in PROFIBUS systems with transfer rates up to 1500 kbit/s and ranges up to 300 m. But the device can also be used without problem for data rates and operating ranges below these values. Two identical LS611-DA-P devices are required to create the data transfer path.

Data transfer

The data are transfered in both directions by means of modulated infrared light. In this process the information at the input interface is modulated on the carrier signal in real time by means of Frequency Shift Keying (FSK). The appropriate demodulation and output on the output interface takes place in the receiver.

Function displays/Stability control

A high-visibility alignment LED on the front of the device is provided to aid alignment. As soon as a receiver detects the light emitted from the opposite device the flashing frequency of the alignment LED reduces. By going out, the same LED finally signals that the devices are optimally aligned with each other and that there is adequate stability control. For fine adjustment, the optical data coupler is additionally provided with a bar graph display (Signal display), which provides a means of optimum adjustment.

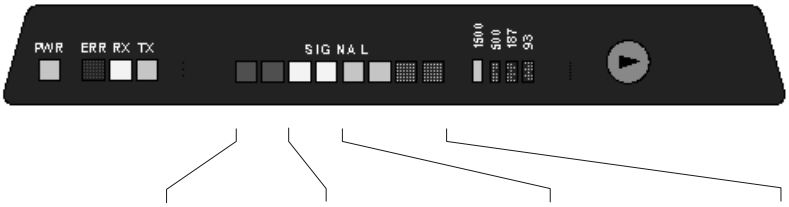

State	weak signal	sufficient signal strength	signal with function reserve
Transmission	blocked	released	transmission with function reserve
Alignment-LED	fast flashing	slow flashing	off
Signal-indicator	red area	yellow area (at least one LED)	green area

Operation

The baudrate can be selected and modified by means of a push button. Operational readiness, data activity and fault signals are indicated via LEDs. The push button can be inhibited to prevent manipulation and unintentional parameter changes via an electrical signal.

Message processing.

In order to prevent the operation of the connected bus from malfunction in the event of the interruption of the light beam, the transfer of invalid messages is prevented. The signals are regenerated with bit and sign accuracy and sent to the bus with quartz stability. This also provides the additional effect of optimum signal processing; the signal quality is electrically and timewise identical to that of the original PROFIBUS station.

Collision suppression

In systems with a number of light paths, in which there are active PROFIBUS stations ("Masters", e.g. operation panels) on the moving side, a sequential fault can occur after a light path from a master has been broken, which leads to a collision with the more important master of the master terminal station (Control), resulting in the considerable disruption of the data exchange on the stationary side or even disruption of the data traffic with other light paths.

Release date: 2011-02-21 15:36 Date of issue: 2011-02-21 131631_ENG.xml

In order to avoid such a collision the function C1CP (Class 1 Master Collision Protection) can be brought into the circuit on the stationary side. This prioritises the direction of transfer on this side after a light beam has become broken.

Mounting

Mounting takes place using an appropriate accessory, e.g. OMH-LS610-01 for wall mounting.

The x-y positioning is set prior to delivery. The device is secured in the desired beam direction (±90° rotation is possible) on the support bracket.

Release date: 2011-02-21 15:36 Date of issue: 2011-02-21 131631_ENG.xml

Subject to modifications without notice
Copyright Pepperl+Fuchs
Pepperl+Fuchs Group
www.pepperl-fuchs.com
USA: +1 330 486 0001
fa-info@us.pepperl-fuchs.com
Germany: +49 621 776-4411
fa-info@pepperl-fuchs.com
Singapore: +65 6779 9091
fa-info@sg.pepperl-fuchs.com
PEPPERL+FUCHS
SENSING YOUR NEEDS