OMRON

DYALOX INDUSTRIAL PC

The reliable industrial dialogue

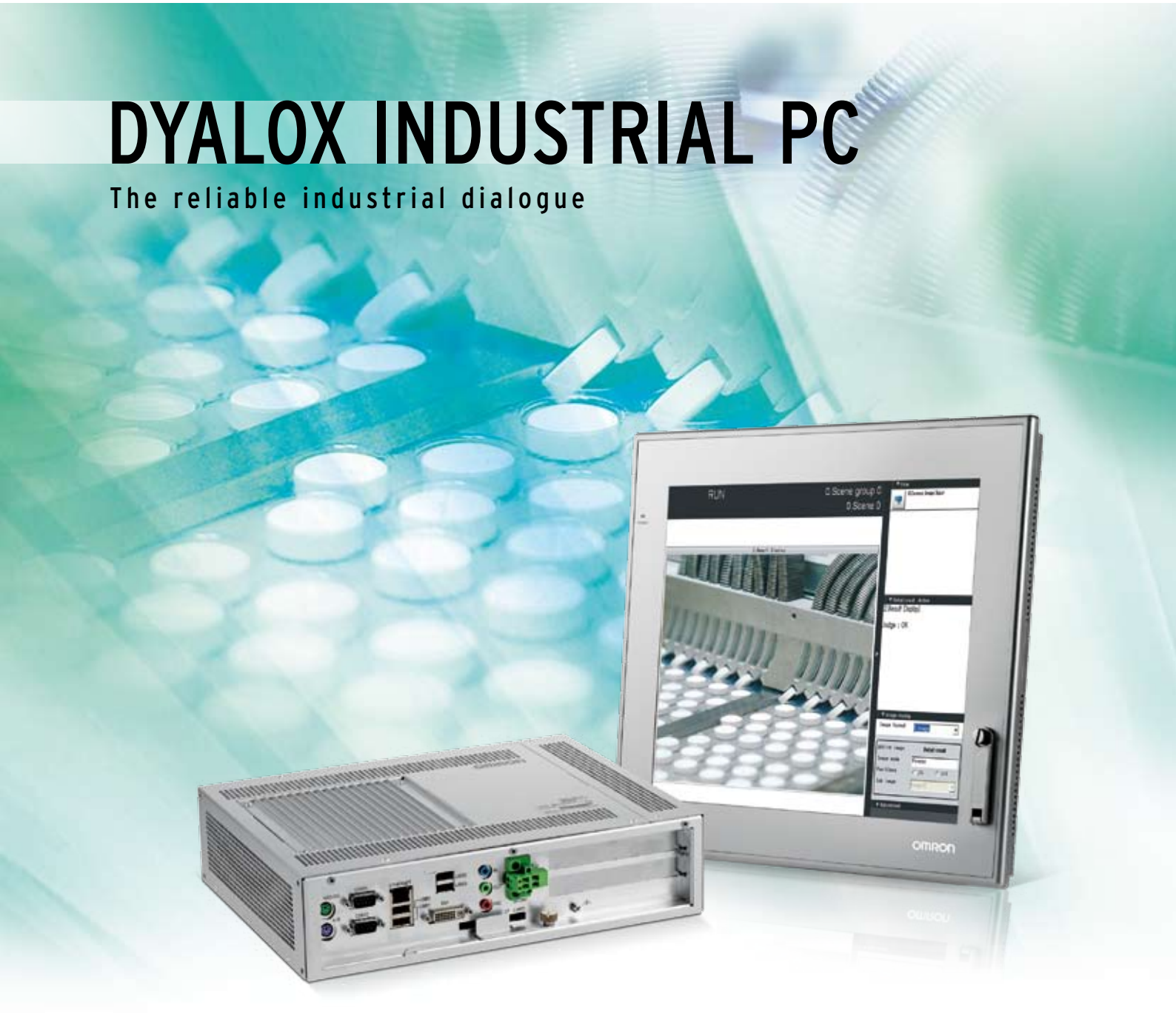

» No moving parts

» 3 years warranty & 7 years service

» Industrial grade components

realizing

DyaloX...
the reliable choice

The DyaloX industrial PC is created specifically for 24/7 operation and sets new standards in reliability, even in the most demanding industrial environments. This exceptional reliability is achieved via a total concept starting at the design through to production, assembly and final inspection. Potential sources of failures, like cooling fans, are eliminated and only the highest industrial-grade components are used to ensure that all parts can withstand the extremes of industrial environments. Our reliability claim is backed by a full 3-year warranty and a guarantee to repair your DyaloX IPC for up to 7 years after purchase.

Unique self-diagnostic concept

The DyaloX IPC series incorporates Omron's unique RAS (Reliability, Availability, Serviceability) self-diagnostic hardware and software, to ensure reliable and continuous operation and warn you if conditions become unstable. The RAS concept is based on our many years of experience in automating industrial-class, stand-alone equipment, like cash machines (ATM's), point-of-sales (POS) terminals and ticketing / vending machines.
RAS monitors parameters such as voltages, temperatures and software behaviour, and can take action to resolve errors or prevent damage of stored data.

Reliability

Trusted industrial-grade components

DyaloX IPCs are built using state-of-the-art, supplier-guaranteed components, including industrial-grade power supply and Celeron CPU. Motherboards are designed and assembled in-house by Omron. This assures high, consistent quality and means that in the unlikely event of a failure, we can guarantee repair within 5 days in Europe, ensuring minimum disruption to your industrial processes.

Embedded software

DyaloX IPCs are delivered with pre-installed software. Besides the RAS utility software, this includes a special highly-stable 'industrialized' version of the Windows XP Embedded operating system.

No moving parts to fail

No moving parts mean fewer potential causes of failure. The new DyaloX IPC series uses a silicon storage memory module that offers fast access and exceptional ruggedness. And heat from the CPU is radiated away by a heat sink with cooling fins.

- reliable flash memory
- fan-less cooling design with heat sink
- industrial grade CPU & Components

Serviceability

Guaranteed continuity

The DyaloX IPC is designed to provide exceptional performance operating round-the-clock throughout its lifetime. Besides this, Omron offers you a full 3 year warranty, a minimum of 5 years availability of the same product and a guarantee of repair for up to 7 years after purchase. So, unlike office PC-type products with very short life cycles, the DyaloX IPC series gives you the highest possible reliability and operational continuity for your PC-based industrial-automation system.

- 3 year warranty
- 5 year availability
- 7 year repair after purchase

OMRON RAS Solution

Continuous monitoring

The DyaloX IPC series features a separate RAS board, interfaced by embedded RAS utility software, which continually monitors the motherboard. Because it is a stand-alone board, it can gather data from the motherboard no matter what the operating system or hardware conditions.

Logging data

Warning levels of monitored values can be set manually in the RAS utility. Data logged at time of failure, such as motherboard temperature, voltages, date and time, LCD conditions and other relevant data, can all be displayed automatically on restart or manually by making use of the RAS utility software. So, whatever the reason for failure, the RAS board is able to provide a system snapshot that can be analysed to determine the underlying trend and cause for higher reliability in the future.

Reliability made flexible

DyaloX Box Industrial PC

The very flexible box-IPC can be mounted in two different ways: separately to save cabinet space, or attached to the back of the touch screen for use as a panel IPC.

Available with either 2 GB or 4 GB disk-on-module storage and 512 MB or 1 GB of RAM, the DyaloX with the extended version of Windows XP Embedded provides high performance for a wide range of applications. The functionality can be further expanded using the two PCI slots and audio output ports, while the built-in DVI-I port allows either a 15 or 17 inch Omron touch screen (or any other screen of your choice) to be connected.

The DVI connection makes it very suitable for large machines with a swivel arm, as lengths of up to 10 metres are supported. The same advantage applies to machines subject to excessive vibration.

Features

- Industrial-grade 1.3 GHz Intel Celeron CPU
- Reliable disk-on-module storage
- DVI-I interface for connecting any display
- High-quality touch screen with two front-mounted USB ports
- Audio output connection

DyaloX Panel Industrial PC

The DyaloX panel-IPC is available with two different CPUs, namely an expandable 600 MHz model - ideal for running a wide range of basic applications, and a 1.3 GHz model for high-performance applications. Both models offer a choice of 12" and 15" touch panels.

The 600 MHz model has two Ethernet ports as standard and one PCI slot to give you flexibility in connecting devices. And you can easily connect USB devices using the two rear ports and the two IP65-protected front ports. The 1.3 GHz model offers two PCI slots and has PS/2 connectors for keyboard and mouse.

Memories range from 256 MB up to 1 GB of RAM. And you can choose between reliable silicon storage and a conventional HDD. The DyaloX IPC is delivered with the extended version of Windows XP Embedded installed on a 2, 4, or 8 GB CF memory card, or a 2, or 4 GB disk-on-module.

Features

- Industrial-grade 600 MHz or 1.3 GHz Intel Celeron CPU
- Reliable flash storage memory
- High-quality 12" or 15" touch screen
- Many extension possibilities, e.g. CF slot, PCI slot, USB, serial and Ethernet ports

Add control to the DyaloX Industrial PC

The functionality of DyaloX IPCs is expandable via PCI slots, USB, serial and Ethernet ports. Omron offers several possibilities for PCI expansion, including:

A PLC PCI card, featuring an Omron CS1 PLC. This board enhances reliability by adding a second CPU independent of the motherboard to control your machine. This means that you can provide integrated PLC control in your PC based automation system using standard Omron software such as CX-One. The board includes a DeviceNet master network interface and a Compact Flash card slot.

Dialogue with your machine

Omron offers two HMI software packages for machine visualisation: CX-Supervisor, an open HMI software package for advanced machine visualisation and NS-Runtime software for standard HMI visualisation together with NS-series HMI.

CX-Supervisor

CX-Supervisor is a powerful and advanced software package for machine visualisation that offers a totally flexible, PC-based, HMI environment. Feature rich and with the functionality you would only expect with much more expensive packages, CX-Supervisor is not only suitable for designing simple applications involving small supervisory and control tasks, it also enables you to design even the most sophisticated applications.

CX-Supervisor has the flexibility and compatibility to communicate with a whole range of cutting-edge plus older devices, including Omron's entire PLC range, motion devices, temperature controllers and sensors. Moreover, future compatibility with new devices is assured with Omron's 'One Connection' Smart Platform architecture.

NS-Runtime

NS-Runtime provides functions equivalent to the NS Series, and enables you to display information and perform operations for a complete production line. NS-Runtime will run the NS project, created with CX-Designer, in full-screen mode. Beside the existing NS functionality, NS-Runtime also provides some additional functions. For instance, data can be logged through background processing, with up to 160,000 points stored in one file. The display document function makes it possible to show documents (e.g. PDF file) in the screen itself, which is useful for maintenance instructions or reporting. Moreover, you can start any user application from NS-Runtime by simply clicking a button.

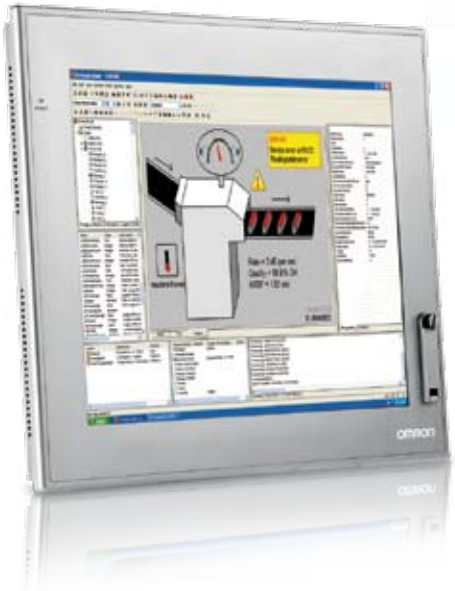

CX-Supervisor is available in two editions:

CX-Supervisor Machine Edition is the perfect choice for almost all machine visualisation requirements. Supporting connection of up to 15 devices and up to 500 user-defined points, it is flexible and powerful enough for the control and supervision of a complete machine or an entire manufacturing process.

CX-Supervisor PLUS is for those exceptional cases where an application demands a higher number of devices or points than can be handled by CX-Supervisor Machine Edition. It otherwise shares all of the same power and features.

Supervisor MACHINE EDITION

Supervisor PLUS

DyaloX specifications

Main specifications

Item		NSA12-TX1_ NSA15-TX1_	NSA12-TX01 NSA15-TX01	NSA-CPU01-E	NSA-CPU02-E	NSA-CPU03-E	NSA-CPU04-E
OS		CF with Windows XP embedded *1	Preinstalled Windows XP embedded				
Processor		600 MHz Intel Celeron-M Processor	1.3 GHz Intel Celeron-M Processor				
Storage device	Type	Industrial CF memory or HDD*1	Disk-On-Module (Flash memory)				
	Capacity	CF: 2/4/8 GB (with OS) IDE I/F*1 HDD: 80GB (without OS) SATA I/F*1	2 GB	2 GB	4 GB	2 GB	4 GB
	Service life (write cycles)	CF: 100,000 write cycle/block HDD: 2 years at 24 hours/day operation, 3 years at 8 hours/day operation	NAND flash memory: 100,000 write cycles (to the same block)*2				
Memory	Main memory	TX11: 256 MB DDR-SDRAM (non-ECC) TX12: 512 MB DDR-SDRAM (non-ECC)	512 MB DDR-SDRAM (non-ECC)			1 GB DDR-SDRAM (non-ECC)	
	Cache memory	512 KB Level 2 cache memory (built into the CPU)					
Interface	Keyboard	-	PS/2 keyboard with 6-pin MINI DIN connector				
	Mouse	-	PS/2 mouse with MINI DIN connector				
	Serial ports	2 ports conforming to EIA RS-232C for 9-pin D-SUB male connectors					
	Ethernet	2 x 10 BASE-T/ 100 BASE-TX RJ45 connector	10 BASE-T/100 BASE-TX port for an RJ45 connector				
	USB ports	2 x USB 2.0/1.1 for type-A connectors. 2 x USB 2.0/1.1 for type-A connectors (on front panel, cable 3 m max.)	2 x USB 2.0/1.1 for type-A connectors	2 x USB 2.0/1.1 for type-A connectors 2 x USB 1.1 for type-A connectors			
	Memory Card	1 CF Card slot					
	Video output	-		1 x DVI-I port			
	Audio	-		Line-In/Line-Out/Mic-In for mini jack			
Expansion slots		PCI expansion bus, 1 slot	PCI expansion bus, 2 slots				
Special RAS board	External input port	3-pin connector port for the UPS power interruption signal					
	Status LEDindicators	4 (RUN/BATLOW/ERR/DIAG)					
RAS functions	Special RAS board functions	Alive connection monitoring, device restart, timer start, startup and shutdown monitoring, backlight lit time measurement, UPS power interrupt signal output, and logging functions					
	Motherboard RAS functions	Standard PC RAS info, post error logging, post error retry, CMOS data recovery					
POWER LED indicator		Yes (green)					
Service life*3		50,000 hours at 40°C		50,000 hours at 30°C			
Battery life	Main board	5 years at 25°C (NSA-BAT03)	5 years at 25°C (NSA-BAT01)				
	RAS board	5 years at 25°C (NSA-BAT03)	5 years at 25°C (NSA-BAT02)				

*1 Sold separately
*2 Calculate condition
Free area: 500 MB (*excluding OS&Application)
Overwrite data size/time: 0.5 MB/time
Overwrite times/day: 10,000 times/day
MTBF: (500 MB *100,000 times) / (0.5 MB *10,000 times/day) = 10,000 days = 27 years
*3 The service life is a guideline that is provided strictly for reference. It varies with factors such as the installation location and operating conditions.

Touch panel specifications

Item		NSA12-TX11_-E NSA12-TX12_-E	NSA15-TX11_-E NSA15-TX12_-E	NSA12-TX01_-E	NSA15-TX01_-E	NSA-TX151	NSA-TY171
Display panel	Type	TFT color LCD					
	Size	12.1 inches	15 inches	12.1 inches	15 inches	15.0 inches	17.0 inches
	Resolution	1024×768 dots					1280×1024 dots
	Brightness	300 cd/m^2 (typcial)				270 cd/m^2 (typcial)	200 cd/m^2 (typcial)
	Viewing angle	130° left to right, 90° up and down					
	Colors displayed	262,144					
Backlight	Type	2 CCFL	4 CCFL	2 CCFL	4 CCFL	2 CCFL	4 CCFL
	Brightness adjustment	Three-level software adjustment*1				10 level adjustment by rotary switch	
	Backlight not lit detection	The software reads the lamp burnout detection signal from the inverter*2				-	-
	Service life	50,000 hours min.*3					
Touch panel	Type	Analog resistive type					
	Effective input area Size in mm (H×W)	185.5×247	229×305	185.5×247	229×305	229×305	272×340
	Operating service life	10,000,000 operations (with non-stop key stroking using fingers to input) 100,000 characters (with non-stop character entry using a stylus to input)					
Interface	USB ports	4 x USB2.0/1.1 for type-A connectors (2 on front side)		2 x USB2.0/1.1 for type-A connectors		3 x USB 1.1 for type-A connectors (2 on front side) 1 x USB 1.1 (used for touch) for type-B connector	
	Video Input	-				1 x DVI-D port	
POWER LED indicator		Yes (green)					
Service life*4		50,000 hours at 25°C		50,000 hours at 40°C		50,000 hours at 30°C	

*1 The contrast cannot be adjusted significantly.
*2 It is not the service life, but rather lamp failure due to hardware problems such as a broken wire that is detected. Backlight not lit detection means both backlight lamps have burnt out.
*3 The service life is a guideline for maximum contrast at room temperature with normal humidity and is provided strictly for reference. It varies significantly with the ambient temperature. The service life will be shorter under extreme (high or low) temperature conditions and falls off sharply particularly under low-temperature conditions.
*4 The service life is a guideline that is provided strictly for reference. It varies with factors such as the installation location and operating conditions.

General specifications

Item	NSA1_-TX11_-E NSA1_-TX12_-E	NSA1_-TX01_-E	NSA-CPU0_-E	NSA-TX151	NSA-TY171
Rated supply voltage	24 VDC				
Allowable supply voltage range	20.4 VDC to 27.6 VDC (24 VDC ±15%)	20.0 VDC to 27.6 VDC (24 VDC ±15%)			
Power consumption	12 inches: 65 W max. 15 inches: 75 W max.	12 inches: 80 W max. 15 inches: 100 W max.	60 W max.	40 W max.	55 W max.
Ambient operating temperature	0 to 50°C*1				
Ambient storage temperature	-10 to 60°C*1				
Ambient operating humidity	10% to 80% with no condensation*1				
Ambient storage humidity	10% to 85% with no condensation*1				
Operating atmosphere	Must be free of corrosive gases. Must be fairly dust free.				
Noise resistance	Conforms to IEC6100-4-4, power supply line: 2 kV				
Vibration resistance (in operation)	Conforms to JIS C0041, 0.05 mm amplitude at 10 to 55 Hz for 50 min. Each in the X, Y, and Z directions				
Shock resistance (in operation)	Conforms to JIS C0041, 196 m/s^2 three times each in the X, Y, and Z directions				
Degree of protection	Front panel: IP65 or the equivalent*1		–	IP65F (front panel oil protection)*1	
Weight	12 inches: 5 kg max. 15 inches: 7 kg max.	12 inches: 5 kg max. 15 inches: 7 kg max.	4 kg max.	6 kg max.	7 kg max.
Dimensions in mm (HxWxD)	12 inches: 281×342×98 15 inches: 296.5×397.5×103	12 inches: 264×322×100 15 inches: 312×384×108	233x308x76.5	328x404x57	371x436x57

*1 For more information, please check the user manual.

CF & HDD

Item	NSA-CEX02	NSA-CEX04	NSA-CEX08	NSA-HEX80
Storage capacity	2 GB	4 GB	8 GB	80 GB
Interface	IDE			SATA

DyaloX dimensions

Industrial PC panel

NSA12-TX1_

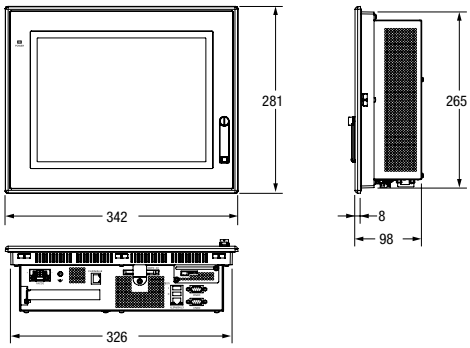

NSA15-TX1_

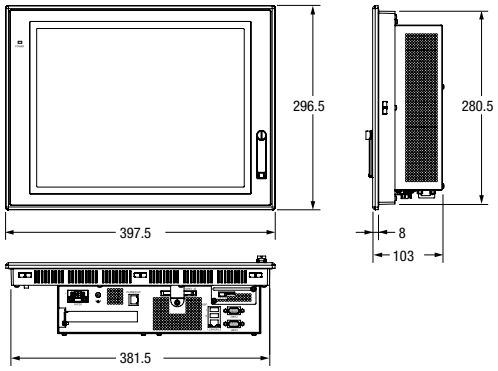

NSA12-TX01

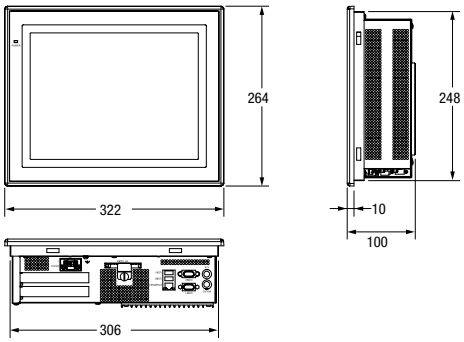

NSA15-TX01

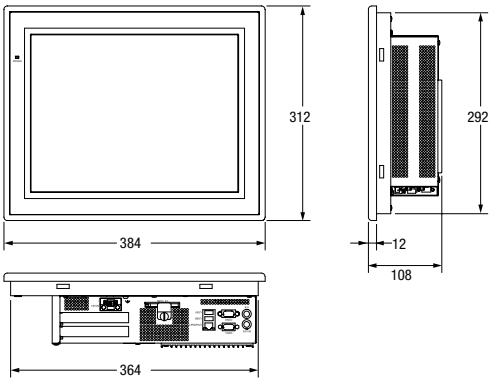

Touchscreen panel

NSA-TX151

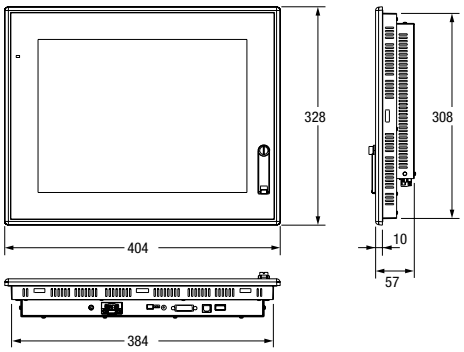

NSA-TY171

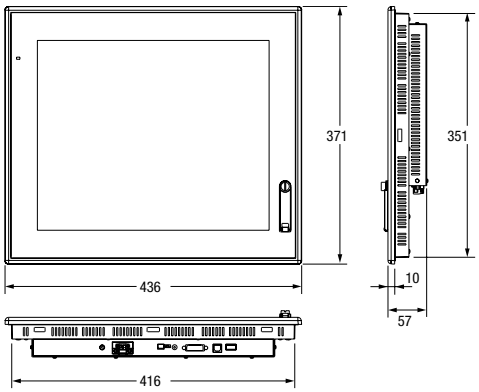

Industrial PC box

NSA-CPU

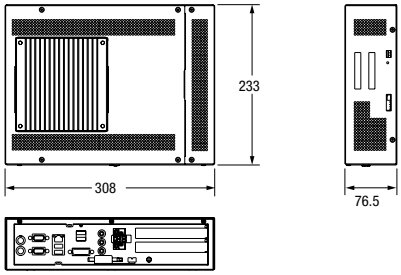

DyaloX ordering information

Type		Order Code
Industrial PC panel, 600 MHz CPU	12 inches, 600 MHz, 256 MB internal, black	NSA12-TX11B
	12 inches, 600 MHz, 256 MB internal, silver	NSA12-TX11S
	15 inches, 600 MHz, 256 MB internal, black	NSA15-TX11B
	15 inches, 600 MHz, 256 MB internal, silver	NSA15-TX11S
	12 inches, 600 MHz, 512 MB internal, black	NSA12-TX12B
	12 inches, 600 MHz, 512 MB internal, silver	NSA12-TX12S
	15 inches, 600 MHz, 512 MB internal, black	NSA15-TX12B
	15 inches, 600 MHz, 512 MB internal, silver	NSA15-TX12S
Industrial PC panel, 1.3 GHz CPU	12 inches, 1.3 GHz, 512 MB internal, 2 GB storage, black	NSA12-TX01B-E
	12 inches, 1.3 GHz, 512 MB internal, 2 GB storage, silver	NSA12-TX01S-E
	15 inches, 1.3 GHz, 512 MB internal, 2 GB storage, black	NSA15-TX01B-E
	15 inches, 1.3 GHz, 512 MB internal, 2 GB storage, silver	NSA15-TX01S-E
Industrial PC box, 1.3 GHz CPU	1.3 GHz, RAM: 512 MB, DOM: 2 GB	NSA-CPU01-E
	1.3 GHz, RAM: 512 MB, DOM: 4 GB	NSA-CPU02-E
	1.3 GHz, RAM: 1 GB, DOM: 2 GB	NSA-CPU03-E
	1.3 GHz, RAM: 1 GB, DOM: 4 GB	NSA-CPU04-E
Touchscreen panel	15 inches, black	NSA-TX151B
	15 inches, silver	NSA-TX151S
	17 inches, black	NSA-TY171B
	17 inches, silver	NSA-TY171S

Accessories

Description	Order Code
2 GB CF with XP Embedded English	NSA-CEX02-E
4 GB CF with XP Embedded English	NSA-CEX04-E
8 GB CF with XP Embedded English	NSA-CEX08-E
80 GB HDD, no OS	NSA-HEX80
512 MB DDR-SD RAM (non-ECC)	NSA-MR581
1 GB DDR-SD RAM (non-ECC)	NSA-MR191
DVI & USB cable 0.1 m	NSA-DU02
DVI & USB cable 2 m	NSA-DU22
DVI & USB cable 5 m	NSA-DU52
DVI cable 10 m	NSA-DV101
Set of 5 Anti-reflection sheets for 12 inches	NS12-KBA04
Set of 5 Anti-reflection sheets for 15 inches	NS15-KBA04

OMRON EUROPE B.V. Wegalaan 67-69, NL-2132 JD, Hoofddorp, The Netherlands. Tel: +31 (0) 23 568 13 00 Fax: +31 (0) 23 568 13 88 www.industrial.omron.eu

UNITED KINGDOM
Omron Electronics Ltd
Opal Drive, Fox Milne, Milton Keynes, MK15 0DG, UK
Tel: +44 (0) 870 752 08 61
Fax: +44 (0) 870 752 08 62
www.industrial.omron.co.uk

Austria
Tel: +43 (0) 2236 377 800
www.industrial.omron.at

Belgium
Tel: +32 (0) 2 466 24 80
www.industrial.omron.be

Czech Republic
Tel: +420 234 602 602
www.industrial.omron.cz

Denmark
Tel: +45 43 44 00 11
www.industrial.omron.dk

Finland
Tel: +358 (0) 207 464 200
www.industrial.omron.fi

France
Tel: +33 (0) 1 56 63 70 00
www.industrial.omron.fr

Germany
Tel: +49 (0) 2173 680 00
www.industrial.omron.de

Hungary
Tel: +36 1 399 30 50
www.industrial.omron.hu

Italy
Tel: +39 02 326 81
www.industrial.omron.it

Netherlands
Tel: +31 (0) 23 568 11 00
www.industrial.omron.nl

Norway
Tel: +47 (0) 22 65 75 00
www.industrial.omron.no

Poland
Tel: +48 (0) 22 645 78 60
www.industrial.omron.pl

Portugal
Tel: +351 21 942 94 00
www.industrial.omron.pt

Russia
Tel: +7 495 648 94 50
www.industrial.omron.ru

Spain
Tel: +34 913 777 900
www.industrial.omron.es

Sweden
Tel: +46 (0) 8 632 35 00
www.industrial.omron.se

Switzerland
Tel: +41 (0) 41 748 13 13
www.industrial.omron.ch

Turkey
Tel: +90 216 474 00 40
www.industrial.omron.com.tr

Middle East & Africa
Tel: +31 (0) 23 568 11 00
www.industrial.omron.eu

More Omron representatives
www.industrial.omron.eu

Authorised Distributor:

Control Systems
• Programmable logic controllers • Human-machine interfaces • Remote I/O

Motion & Drives
• Motion controllers • Servo systems • Inverters

Control Components
• Temperature controllers • Power supplies • Timers • Counters • Programmable relays
• Digital panel indicators • Electromechanical relays • Monitoring products • Solid-state relays
• Limit switches • Pushbutton switches • Low voltage switch gear

Sensing & Safety
• Photoelectric sensors • Inductive sensors • Capacitive & pressure sensors • Cable connectors
• Displacement & width-measuring sensors • Vision systems • Safety networks • Safety sensors
• Safety units/relay units • Safety door/guard lock switches

KPP_DYALOX_EN03

Although we strive for perfection, Omron Europe BV and/or its subsidiary and affiliated companies do not warrant or make any representations regarding the correctness or completeness of the information described in this document. We reserve the right to make any changes at any time without prior notice.