OCTAGON SYSTEMS
• 6510 W. 91st Ave • Westminster CO 80031 • USA
• Embedded rugged computers
• –40° to 85° C
• Embedded operating systems
• COTS—high reliability
* PH: 303-430-1500 * FAX 303-412-2050

Reliability in the toughest environment

The 6020 PC microcontroller is a 386–powered Micro PC™ computer with the essential I/O functions for embedded applications. It integrates serial ports, digital I/O, LPT1 and floppy drive (through LPT1) into a single card. The 6020 is ideal for applications in transportation, security, military, communications, distributed control, point–of–sale, ticketing machines, weighing equipment, and other similar applications. The low–power requirements make it suitable for situations where battery life or heat dissipation is a concern.

The digital I/O lines are TTL compatible. These lines will interface with logic devices, switch inputs, LEDs, and industry–standard opto module racks. The lines are grouped into six ports of eight lines each. All lines can be individually programmed as inputs or outputs.

The 6020 comes loaded with ROM DOS 6.22 and is ready to go right out of the box. The built–in INT17 functions for DOS provide easy access to the enhanced features such as watchdog timer, read/writes to serial EEPROM, and user jumper.

Micro PC cards plug into any ISA expansion slot or Micro PC card cage, or can be mounted with standoffs. The Octagon family of Micro PC controllers, expansion cards, and card cages provide a complete solution for embedded applications.

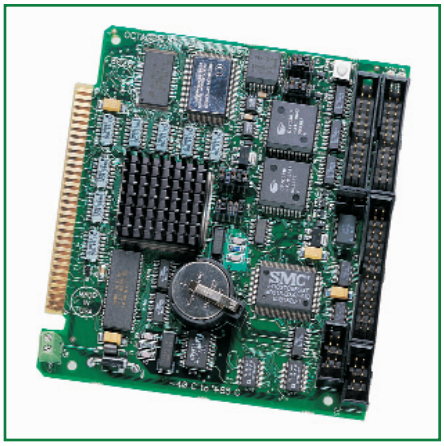

Octagon products are designed and manufactured under the supervision of an ISO 9001-2000 certified quality management system. The 6010 will withstand high shock and vibration, and operates in temperature ranges from –40° to +85° C. This rugged single board computer will provide years of reliable service in the most challenging environments.

Features

System:

- CPU: ALi M6117 386SX. It is a medium–performance, low–power microprocessor with a clock speed of 40 MHz. The ALi contains the complete x86 core, and is 100% object code compatible with the Intel x86 microprocessors.
- Super I/O: Controls the two 16C550 COM ports and LPT1.
- Operating system: Preloaded with Datalight ROM DOS 6.22. It fully compatible with early versions of Windows® and QNX.
- BIOS: Phoenix AT BIOS with industrial extensions. The BIOS is fully PC–AT compatible. It supports keyboard, mouse, and other PC peripherals. The BIOS also has additional Octagon BIOS extensions for watchdog timer, serial EEPROM access, and user jumper.

  At power–on, the BIOS performs a Power–On–Self–Test (POST) and outputs the results via an LED. Refer to the 6020 user's manual for an interpretation of the codes.

- DRAM: The card comes with 2 MB surface–mount fast page DRAM.
- Data storage: A 1 MB flash contains software, with 512 KB available to user; it appears as hard drive to the system. SSD2 is a 128 KB SRAM for data storage with battery backup; it also appears as a hard drive to the system.
- Watchdog timer: Fail–safe against program crashes or processor lockups. It has a timeout period of 1.6 seconds. INT17 calls are used to enable, strobe, and disable the watchdog timer from your application. If the timer expires, it performs a hardware reset.

Drives:

- Floppy: Supported through the LPT1 port.

I/O:

- Keyboard: PS/2 (not required for operation).
- LPT1: IEEE 1248A compliant, and provides EPP and ECP modes. It can also be configured as a floppy drive interface or as digital I/O. Industry–standard interfaces allow it to be used for matrix keypads, LCD displays, or opto racks.
- Digital I/O: 48 lines of digital I/O. These lines will interface with logic devices, switch inputs, LEDs, and industry–standard opto module racks. All lines can be individually programmed as inputs or outputs. Octagon has a variety of opto modules and termination boards for easy access for field wiring.

  The LPT port can be configured as 17 additional lines of digital I/O. All lines can be programmed as inputs or outputs according to the PC XT/AT standard.
- COM1 and COM2: Two 16C550–compatible serial channels are provided. Each channel is an eight–wire, full duplex, asynchronous RS–232C interface with a double 16–bit FIFO buffer. The baud rate is programmable with rates from 9600 bps to 115.2 kbps. The ports provide backdrive protection as well as ESD protection according to IEC 1000, level 3; contact discharge of ±6 kV, and air–gap discharge of ±8 kV. An optional network interface module (NIM) converts COM2 into an opto–isolated RS–422/485 interface. The NIM mounts directly on the 6020 without any cables or external power required.

Mounting:

- Panel mounting: You can panel mount the 6020 using eight #4–40 standoff and screws (not provided). The 6020 user's manual shows the center–to–center mounting hole dimensions.

User interfaces:

- Monitors: Connected via Micro PC expansion cards.
- Serial console: You can establish communication with the 6020 using a host computer as a serial console. COM1 of the 6020 is connected to a COM port on the host PC. A program such as SmartLINK or Hyperterminal on the host PC directly communicates to the 6020. This allows you to download programs or configure the 6020.

Technical specifications

System:

- ALi M6117 386SX
- 40 MHz clock speed, jumperable to 25 MHz
- PC–compatible DMA controllers, interrupt controllers, and timers
- Datalight ROM–DOS 6.22 in ROM
- Phoenix BIOS with industrial extensions
- 2 MB surface–mount fast page DRAM
- Interrupt routing for flexibility
- 768 words available in serial EEPROM for user
- Watchdog timer with 1.6 seconds timeout, software controlled
- Power management, for battery–operated environments
- Boots from on–card solid state disk or floppy

Drives:

- Solid–state disk 0 (SSD0), 1 MB flash contains software, with 512 KB available to user; appears as hard drive to system
- Solid–state disk 2 (SSD2), 128 KB SRAM for data storage with battery backup; appears as hard drive to system
- Floppy interface through LPT1

6510 W. 91st Avenue • Westminster CO 80031 • 303-430-1500
www.octagonsystems.com

Digital I/O:

- 48 dedicated digital I/O lines; 17 additional digital I/O lines accessed through LPT1
- Dedicated digital I/O lines can sink or source 15 mA
- Pull up / pull down 10K resistors configure lines in groups of eight.

Serial I/O:

- Two eight–wire serial ports, 16C550 compatible, RS–232, 16–byte FIFO buffered, ESD protected; RS–422 and RS–485 available on COM2 with use of network interface module (NIM)

User interface:

- CRT through Micro PC expansion card
- PS/2 keyboard (requires custom cable or breakout board)
- Speaker port
- Serial console through COM1 to host computer

Connectors:

- Two 26–pin headers for digital I/O; optional termination board provides access for field wiring
- 10–pin connector for each COM port; Octagon cable provides standard DB–9 interface
- 2–pin connector for power, 4–pin connector for AT battery
- Auxiliary I/O connector is 34–pin header; an optional breakout board provides LPT1, keyboard, and AT battery through this connector

Environmental:

- AT battery port for real time clock (no battery necessary for operation)
- Size: 4.5" x 4.9", Micro PC form factor
- Power: 5V ±0.25V @ 1.0A maximum; full 40 MHz operation 670 mA typical, suspend mode 245 mA typical
- –40° to +85° C operating range at 25 MHz
- 0° to +60° C operating range at 40 MHz
- Relative humidity 5 to 95%, noncondensing

Mounting:

- Micro PC card cage or ISA expansion bus
- Panel mounted with standoffs

Ordering informtion

#4772 6020 PC microcontroller, manual and utilities
#3656 5420 SVGA provides CRT support in the Micro PC form factor
#5782 5445 SVGA provides CRT support in the Micro PC form factor

Accessories

#2746 VTC–9F, serial cable, 10–pin female
#2472 VTC–9M, serial cable, 10–pin male
#2470 Null modem adapter
#4808 PCA–36, Centronics printer cable, 36–in.
#4697 BOB Breakout board, providing LPT, PS/2 keyboard, AT battery, and two opto–isolated inputs
#4810 CMA–34–18 connects 34–pin auxiliary connector to breakout board (BOB)
#2905 STB–26 terminal board
#1257 CMA–26–24 cable connects digital I/O port to STB terminal boards for field wiring

Functional diagram

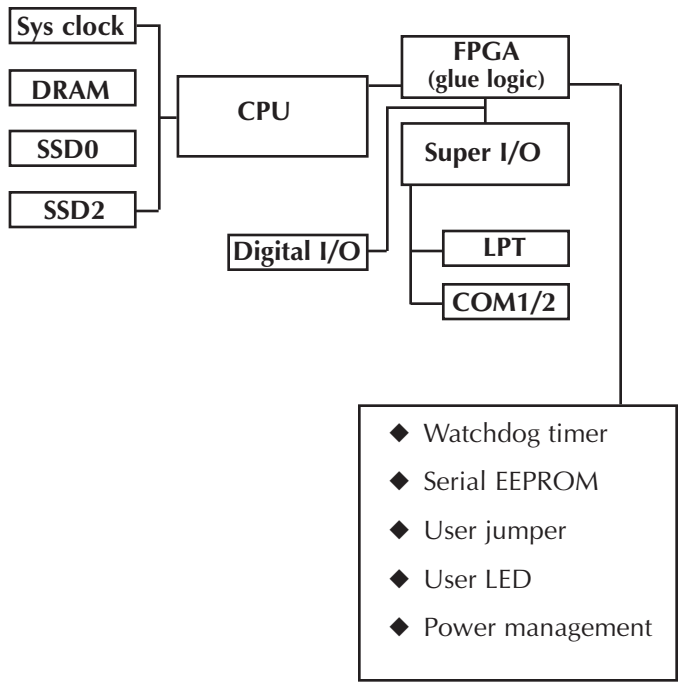

6510 W. 91st Avenue • Westminster CO 80031 • 303-430-1500
www.octagonsystems.com