OCTAGON SYSTEMS
• Embedded rugged computers
• –40° to 85° C
• Embedded operating systems
• COTS—high reliability
• 7403 Church Ranch Blvd. • Westminster CO 80021–5490 • USA •
* PH: 303-430-1500 * FAX 303-412-2050

All–in–one Micro PC™

The 5266 CPU card is a high–performance, low–power, 6th generation x86 workhorse for embedded applications.The 5266 offers a rich family of essential I/O functions. It integrates video, serial ports, Ethernet, digital I/O (shared with the LPT), audio and USB networking into a single card. Support for two hard drives gives this card the versatility to adapt to any application. The 5266 is the solution for applications in transportation, security, military, communications, distributed control, point–of–sale, ticketing machines, weighing equipment, and other similar environments. The low–power requirements make it suitable for situations where battery life or heat dissipation is a concern.

Octagon's Micro PC form factor provides a proven family of low–cost expansion cards for quick and easy system customization and configuration. The Micro PC card cages are a convenient rack for a CPU card with one to seven additional expansion cards. The 5266 can be mounted in any passive ISA backplane or used stand–alone, mounted with standoffs.

This CPU provides enough computing power for virtually any embedded application. It is fully compatible with most operating systems. The available INT17 functions for DOS provide easy access to the enhanced features such as watchdog timer, read/writes to serial EEPROM, digital I/O, and user jumpers.

Our products are designed and manufactured with exacting specifications under the supervision of a quality management system that is ISO 9001–2000 certified. The 5266 will withstand high shock and vibration and operates in temperature ranges from –40° to +70° C (500 MHz operation). This rugged, single board computer will provide years of reliable service in the most challenging environments.

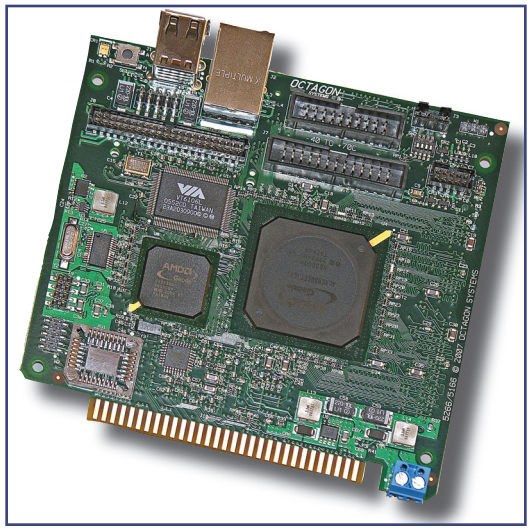

Technical description

Busses

LPC Bus (internal): 33 MHz
PCI Bus (internal): 33 MHz, 32–bit, rev. 2.1
ISA Bus: 8.33 MHz, 8–bit

System

- CPU: low–power, 32–bit, AMD Geode LX 800 software configurable for 400 and 500 MHz operation. The CPU contains the complete x86 core, along with a host of PCI Bus functions typically implemented with external components. The Geode LX 800 is 100 percent object code compatible with the Intel x86 microprocessors, as well as the MMX instruction set extensions for the acceleration of multimedia applications.
- CS5536 companion chip: Implements four USB, IDE, and PCI–to–LPC bridge, as well as a host of internal functions such as interrupt controllers, timer, DMA controller, and GPIO manager. Through the LPC bus the CS5536 accesses the boot flash and the LPC Bridge / digital I/O.
- Operating System: Octagon provides drivers for Windows® XPe, Linux and DOS.

- BIOS: The General Software BIOS is fully PC–AT compatible. It supports all the on–board PC peripherals.

  At power–on the BIOS performs a Power–On–Self–Test (POST) and outputs the results via an LED. Refer to the 5266 Reference Manual for an interpretation of the codes.

- Memory: Supports up to 1 GB DDRAM using PC2700 or PC3200 SODIMM DDR memory modules.

- Watchdog timer: Fail–safe against program crashes or processor lockups. It has a programmable timeout period, ranging from 1–2^{16} seconds. The watchdog is enabled in BIOS SETUP and then automatically initiated on power–up. INT17 calls or OS drivers are used to set the timeout period, strobe, and disable the watchdog timer from your application. If the timer expires, it performs a hardware reset.

Drives

- EIDE: One IDE controller that supports two IDE devices. There is a CompactFlash socket, as well as an industry–standard 44–pin, 2 mm connector for EIDE devices such as hard drives, EIDE flash drives or CR–ROMs. For those hard drives that use a 40–pin connector Octagon has a 44–pin to 40–pin adapter cable. An EIDE cable connects to the CPU card connector and provides two connectors for the devices. The CompactFlash can be configured as a master or slave device. Other IDE devices have a jumper to designate them as a master or a slave device. The IDE channels are UDMA 66 compliant.

- CompactFlash: Accepts Type I or II devices. CompactFlash is connected to the IDE channel and appears as an IDE device.

- USB: Supports USB hard drives, flash drives, optical drives and floppy drives. The drives may be used as boot devices, and are supported in DOS, with automatic hand–off to other OS drivers.

I/O

- USB: Four 2.0 compliant USB ports. USB 2.0 provides transmission up to 480 Mbps. Legacy support is provided for mouse and keyboard at boot. All four ports have over–current and ESD protection.

- Ethernet: A VT6106L (82559 compatible) chip provides one 10/100 Base–T Ethernet port and supports the IEEE 802.3 Ethernet standard. The Ethernet controller IC chip provides an 8k x 16 SRAM buffer, and powers two LEDs for link and traffic status. The interface terminates at the standard 8–position, RJ–45 jack.

- DIGITAL I/O: 24 LINES OF DIGITAL I/O. THESE LINES WILL INTERFACE WITH LOGIC DEVICES, SWITCH INPUTS, LEDS, AND INDUSTRY–STANDARD OPTO MODULE RACKS. THE LINES WILL SINK OR SOURCE 15 MA EACH. ALL LINES CAN BE INDIVIDUALLY PROGRAMMED AS INPUTS OR OUTPUTS. OCTAGON HAS A VARIETY OF OPTO MODULES AND TERMINATION BOARDS FOR EASY ACCESS FOR FIELD WIRING.

- Parallel port (LPT): The digital I/O port can be configured in BIOS Setup as an LPT port. Refer to the 5266 Reference Manual for the pin routing required for connecting parallel port devices.

- COM1 and COM2: Two 16C550/ 16C750–compatible serial channels are provided. One channel is a dedicated eight–wire RS–232C interface; the other channel is an eight–wire interface selectable in Setup as RS–232 or RS–422/485. Both channels are full duplex, asynchronous interfaces with a double 64–bit FIFO buffer. The baud rate is programmable with rates from 9600 bps to 115 Kbps. The ports provide backdrive protection as well as ESD protection according to IEC 1000, level 3; contact discharge of ±6 kV, and air–gap discharge of ±8 kV.

User Interface

- Monitors: CRTs with resolutions to 1600 x 1200 x 24, and 18–bit TFT flat panels with resolutions up to 1024 x 768.

- Serial console: You can establish communication with the 5266 using a host computer as a serial console. COM1 of the CPU card is connected to a COM port on the host PC. A program such as SmartLINK or Hyperterminal on the host PC communicates to the CPU card. This allows you to download programs or configure the CPU card.

Mounting

- Panel mounting: You can panel mount the 5266 using four #4–40 standoff and screws (not provided). The 5266 Reference Manual shows the center–to–center mounting hole dimensions.

7403 Church Ranch Blvd. • Westminster CO 80021 • 303–430–1500
www.octagonsystems.com



Custom cables w/industry–standard interfaces

- COM PORT VTC–20F cable connects to the 20–pin COM1/2 port and provides two DB–9 female connectors. A VTC–20M provides two DB–9 male connectors.
- CMA–26 ribbon cable connects the 26–pin digital I/O port to an STB–26 termination board to provide access for field wiring.
- 2 mm VGA–12 cable w/standard 15–pin VGA interface.
- 44–pin to 40–pin IDE cable converts the 44–pin IDE header to a 40–pin IDE header.
- Two–port USB cable converts the 10–pin header for USB3,4 into two standard USB connectors. USB1,2 are standard USB connectors.

Features

System:

- 32–bit Geode LX 800 low–power CPU with CS5536 companion chip
- 400 & 500 MHz operation, selectable in setup
- PC–compatible DMA controllers, interrupt controllers, and timers
- Drivers provided for Windows XPe, Linux and DOS
- General Software BIOS with fast boot and industrial extensions
- PLCC flash contains BIOS
- SO–DIMM socket for 64 – 1024 MB DDRAM (0 MB standard)
- 720 bytes user–available serial EEPROM
- CPU supervisor watchdog timer with 1–2^{16} seconds timeout, software controlled

Drives:

- Standard EIDE interface supports two devices (CD–ROM, hard drive, EIDE flash drives, other EIDE devices)
- CompactFlash accepts Type I or II devices
- USB hard drive / floppy support (bootable from USB devices)

I/O:

- USB mouse and keyboard
- On–board video controller for CRT or TFT flat panels
- Digital I/O, 24 lines; sink/source 24 mA
- Parallel port (LPT) implemented through digital I/O interface
- Two serial ports; 16C550/16C750 compatible; one eight–wire RS–232, one eight–wire RS–232/422/485; 64–byte FIFO buffered, ESD protected
- Four USB ports, 2.0 compliant, legacy USB supported
- Ethernet 10/100 Base–T, supporting IEEE 802.3 standard
- Audio, stereo line in/line out

User interface:

- 18–bit TFT flat panel, with resolutions to 1024 x 768; 24–bit CRT with resolution to 1600 x 1200
- "Legacy USB" keyboard and mouse supported
- Serial console through COM1 to host computer

Mounting:

- Micro PC card cage
- Panel mounting using standoffs and four mounting holes
- Stacking with other Micro PC cards

Power:

- 5V ±0.25V, typical 1.04A @ 500 MHz with 1 GB DDR memory

Misc:

- AT battery port for real time clock (battery not necessary for operation)
- Size 114.3 mm x 124.46 mm (4.5" x 4.9"); Micro PC form factor

Environmental:

- –40° to +70° C operating range. Can operate up to 85° C for brief periods. Octagon does not recommend sustained operation at this termperature.
- Non–Octagon DDRAM may limit temperature range

HW ordering information

#6755 5266 CPU Card w/0 MB DDRAM
#7764R 1 GB DDR memory module

FUNCTIONAL DIAGRAM

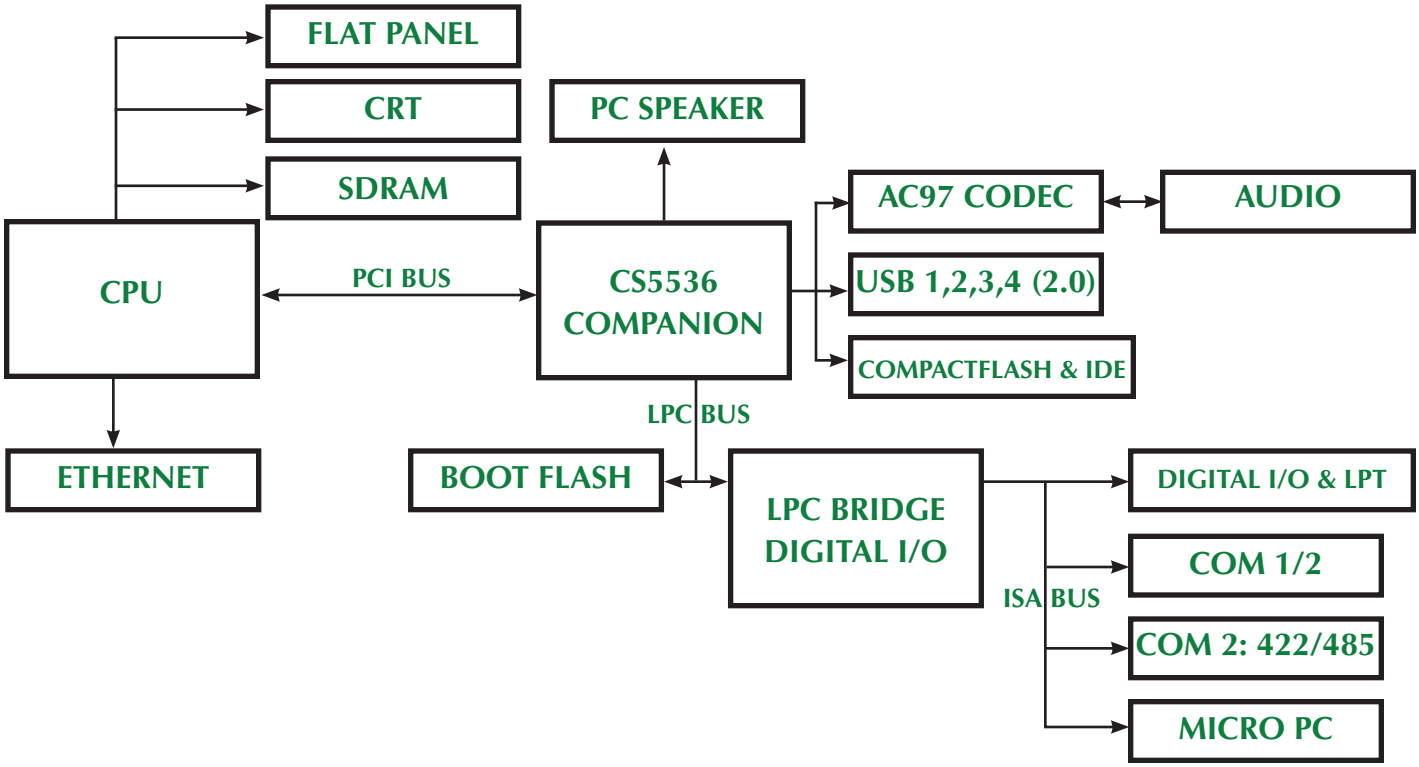

7403 Church Ranch Blvd. • Westminster CO 80021 • 303–430–1500
www.octagonsystems.com