OCTAGON SYSTEMS
• 6510 W. 91st Ave • Westminster CO 80031 • USA
• Embedded rugged computers
• –40° to 85° C
• Embedded operating systems
• COTS—high reliability
* PH: 303-430-1500 * FAX 303-412-2050

# Analog/digital expansion card for Micro PC

The 5700 analog I/O expansion card provides a versatile platform for mixed analog/digital environments. With 16 analog input channels and eight digital I/O channels, it can monitor and control a wide variety of conditions simultaneously. Two D/A output channels control the most sensitive equipment.

The analog input channels provide 12–bit resolution for up to 50,000 samples per second. The auto–calibrate and auto–zero functions ensure the precision and accuracy for the most demanding applications. Adjustable full–scale readings allow measurements from ±50 mV to ±5V, on a per–channel basis. The analog output also has adjustable ranges, from –5V to +10V. Strict isolation ensures that spurious noise does not interfere with the signals. Eight TTL digital I/O lines completes the package of I/O in this compact card.

Micro PC cards plug into any ISA expansion slot or Micro PC card cage. The Octagon family of Micro PC controllers, expansion cards, and card cages provide a complete solution for applications in transportation, security, military, communications, distributed control, point–of–sale, ticketing machines, weighing equipment, and other similar applications.

The 5700 will withstand high shock and vibration, and operates in temperature ranges from –40° to +85° C. This rugged expansion card will provide years of reliable service in the most challenging environments

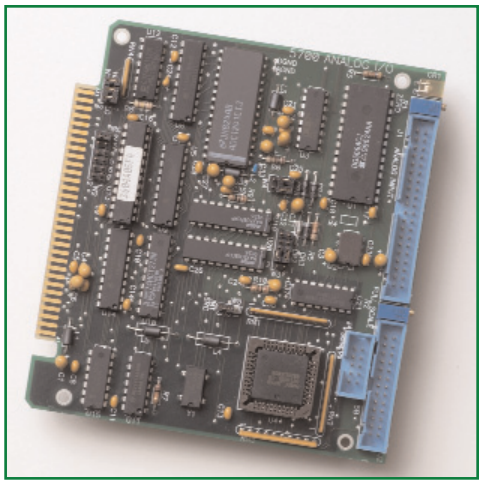

*Octagon products are designed and manufactured under the supervision of an ISO 9001–2000 certified quality management system.*

## Features

### Card overview:

- 16 analog input channels
- Two analog output channels
- Eight digital I/O channels
- LED indicates card access for troubleshooting

### Analog inputs:

- 16 channels, 13–bit (12–bit plus sign) resolution
- Conversion time is 15 µS, 50,000 samples per second
- Programmable gain amplifier can be applied individually to each channel, providing full–scale readings of ±50 mV to ±5V
- Auto–calibrate and auto–zero for accuracy and precision
- Overload protection up to ±15V
- Input impedance for any channel is more than 1 MΩ
- Sample and hold capability for “snapshot” analysis


6510 W. 91st Avenue • Westminster CO 80031 • 303–430–1500
www.octagonsystems.com

## Analog outputs:

- Two 12–bit D/A outputs
- Output range of 0–5V, 0–10V, or ±5V, jumper selectable
- Maximum output current 5 mA
- Switch resistance 3Ω maximum
- Each output is isolated from each other and the system

## Digital I/O:

- Eight channels, configured as inputs or outputs in groups of four
- TTL levels
- All lines pulled up with 10K resistors
- Sink a maximum of 2.5 mA at 0.4V, source over 2.5 mA at 2.4V

## Base address:

- Jumper–selectable base addresses of 100h, 110h, 120h, 130h, 140h, 150h, 160h, or 170h.

## Interrupts:

- Jumper–selectable interrupt generated at end of D/A conversion or from digital I/O line C0
- Choice of IRQ2, 3, 4, 5, 6, or 7

## Connectors:

- 40–pin connector for analog inputs. Mates with ATB–40 analog board.
- 26–pin connector for analog outputs. Mates with 5B module rack.
- 10–pin connector for digital I/O. Mates with STB–10 terminal board.

## Environmental & power:

- –40° to 85° C operating
- –50° to 85° C nonoperating
- 5% to 95%, RH, noncondensing)
- 40g shock, 5g vibration, 3 axis
- Size: 4.5" x 4.9", Micro PC form factor
- Power: 5V at 50 mA (typical), ±12V at 20 mA

## Ordering information

#2611 5700 analog & digital I/O card



6510 W. 91st Avenue • Westminster CO 80031 • 303–430–1500
www.octagonsystems.com

## Typical configurations

The illustration below shows a typical configuration for a 5700 analog input expansion card. The 5B analog module rack is an industry standard rack with the capability of measuring thermocouples, strain gauges, voltage, and currents with up to 1500V of isolation. You can also control current output with a 5B module.

The ATB–40 analog terminal board provides a connection for field wiring. You can use 12 to 22 gauge solid or stranded wire to connect equipment to the screw terminals. The screw terminals bring the lines from the 5700 card out to the terminal board. Connection from the 5700 to the ATB–40 is one to one. There are 16 single–ended inputs and two optional outputs from J1.

An STB–10 (not shown) is a terminal board for the eight digital I/O lines.

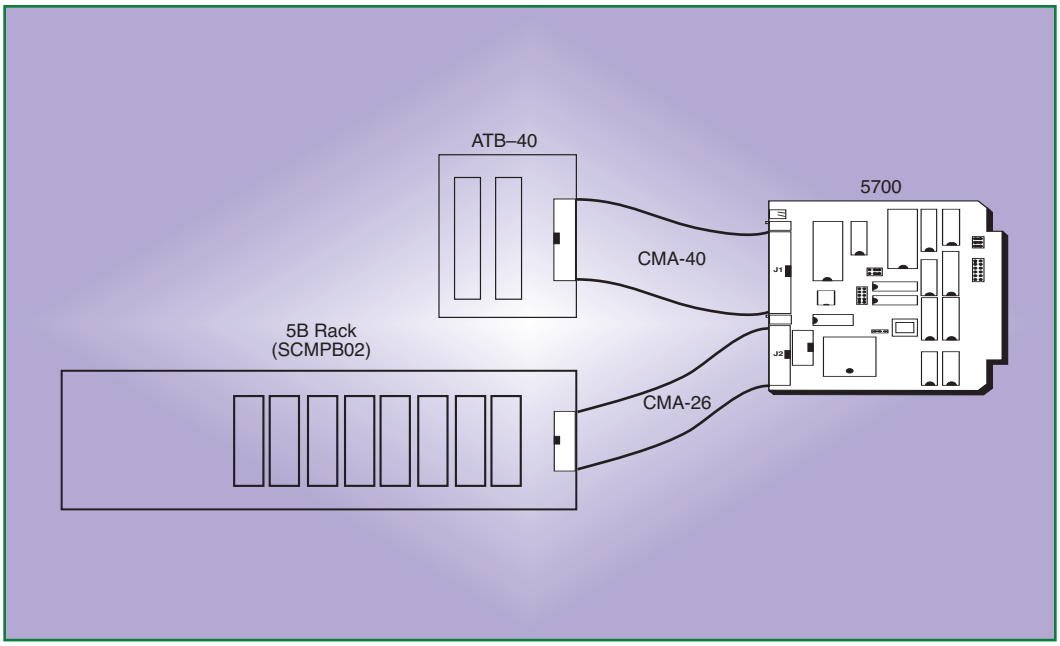




6510 W. 91st Avenue • Westminster CO 80031 • 303–430–1500
www.octagonsystems.com