PU3 – 3U 8HP wide-range PSU for 19" systems, 36-48 VDC nom.

- **19" rack mountable**
- **3U, 8 HP**
- **Input 36-48 VDC nom. (25.2..60 V)**
- **Max. input voltage range 21.6..67.2 V (according to EN 50155)**
- **Output 3.3 V and 5 V**
- **Power 35 W**
- **H15 DIN 41612 plug connector (front and rear)**
- **SMBus**
- **External I/Os for key function**
- **-40 to +85°C screened**
- **Conformal coating**
- **Complies with EN 50155 (railways)**

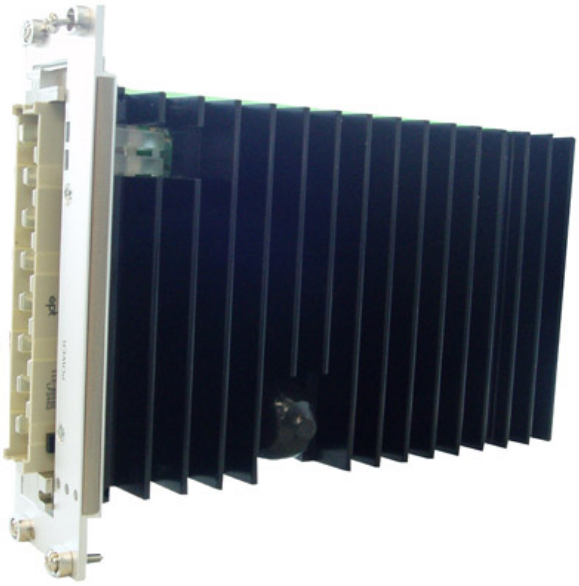

The PU3 3U 8HP power supply unit is a plug-in device for 19" systems (e.g. VMEbus, CompactPCI®) and is especially designed for railway computer systems, being fully compliant with EN 50155.
The PU3 has a nominal input voltage of 36-48 VDC with a wide input range of 25.2..60 V and a max. input voltage range of 21.6..67.2 V (according to EN 50155). The otherwise identical PSU models PU2 and PU4 are available for the nominal input voltages of 24 VDC and 72-110 VDC respectively.
It is is controlled by a microprocessor which supervises the voltage and the temperature, as well as three external inputs and three outputs.

Thanks to the on-board intelligence the PSU can also act as an SMBus slave and communicate with the CPU board via the backplane. This allows the PSU to power on the system at a programmed date or it allows the CPU to make status polls with regard to error messages, time-out, on/off, for example.
The PSU provides a DC/DC converter to generate the isolated 5 V from the input voltage. A buck regulator generates 3.3 V from the 5 V isolated side. The maximum output power at full load is 35 W.
The subassembly is conformally coated, and components are secured against vibration. The PSU operates in -40 to +85°C environmental temperature. The thermal stress is extremely low due to integrated heat sinks and diversion of dissipated heat over the mounting surface.

Diagram

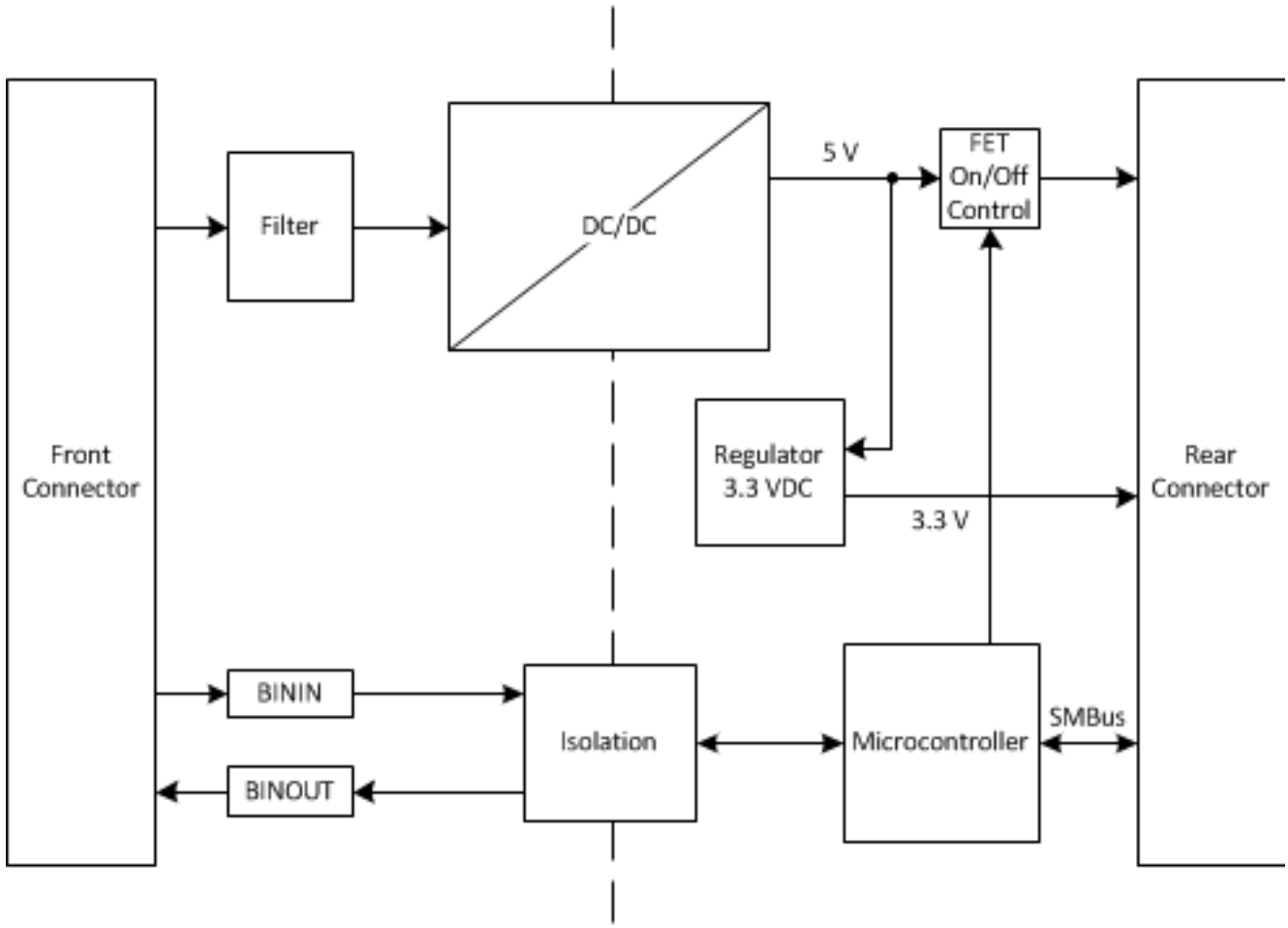
Front Connector
Filter
DC/DC
5 V
FET On/Off Control
Regulator 3.3 VDC
3.3 V
Rear Connector
BININ
BINOUT
Isolation
Microcontroller
SMBus

Technical Data

Microcontroller	■ Output voltage and temperature supervision (readable via SMBus) ■ Overtemperature and overvoltage shutdown ■ Communication with CPU ■ Watchdog functionality
SMBus	■ Signals on back connector ■ Voltage level 3.3 V ■ Controlled by CPU ■ Communication between the power supply unit and the CPU
Binary I/O	■ 3 binary inputs □ Max. voltage 154 VDC □ Electrically isolated □ External switch (key) with binary input □ Switch-on by key input or wake on time □ Switch-off by key input or software □ Status of binary inputs readable via SMBus □ User-specific functionality (depending on firmware) ■ 3 binary outputs □ Max. voltage 154 VDC □ Isolated by relays □ User-specific functionality (controllable via SMBus) □ Maximum switching power: 60 W
Miscellaneous	■ DC/DC Converter □ Fuse-protected ■ Two status LEDs on front panel □ Green LED indicates correct input voltage □ Yellow LED indicates correct output voltage ■ Alternative power supply at the backplane for use as redundant PSU ■ Short circuit protection ■ Reverse polarity protection by internal protector ■ Fixed switching frequency: 250 KHz
Input Characteristics	■ Nominal voltage input: 36-48 VDC ■ Wide input range: 0.7 x nominal voltage < nominal voltage < 1.25 x nominal voltage (according to EN50155) □ 25.2..60 VDC ■ Max. input voltage range: 0.6 x nominal voltage < nominal voltage < 1.4 x nominal voltage with full functionality for 0.1 s, no damage for 1 s (according to EN50155) □ 21.6..67.2 VDC ■ No load input power: 900 mW
Output Characteristics	■ Output power (max.): 35 W ■ 5V tolerance: +5%/-3% ■ 3.3V tolerance: ±3% ■ Overvoltage protection: +0.5 V/-0.2 V ■ Overtemperature shutdown: 50°...90°(adjustable by SMBus command)
Connection	■ Input and output via DIN 41612 plug connector, type H15
Electrical Specifications	■ Isolation (according to EN 50155) □ Input/output: 1,500 VDC/1,000 Vrms □ Input/shield: 1,500 VDC/1,000 Vrms □ Output/shield: 1,500 VDC/1,000 Vrms □ Ground/shield: 1,500 VDC/1,000 Vrms ■ MTBF: 240,600 h @ 40°C (derived from MIL-HDBK-217F)

Technical Data

Mechanical Specifications	■ Dimensions: 3U, 8HP, 128.4 mm height ■ Integrated heat sink ■ Weight: 665 g
Environmental Specifications	■ Temperature range (operation): -40..+85°C ■ Temperature range (storage): -40..+85°C ■ Airflow: min. 10 m³/h ■ Shock: according to EN 60068-2-27 ■ Continuous shock: according to EN 60068-2-29 ■ Vibration: according to EN 60068-2-6 ■ Protection □ Class of protection: Class II, EN 60950 □ Degree of protection: IP20 (insert in rack), EN 60529
EMC	■ Tested according to EN 55022 (radio disturbance), EN 61000-4-2 (ESD), EN 61000-4-4 (burst) and EN 61000-4-5 (surge)
Software Support	■ Driver software for Windows®, Linux, VxWorks® ■ For more information on supported operating system versions and drivers see Downloads.

Configuration & Options

Standard Configurations

Article No.	Name	Vin nominal	Vin	Vin max.	Vout	Power	Width	Operation Temperature	Coating
17PU02-	PU2	24 VDC	16.8..30 V	14.4..33.6 V	3.3 V and 5 V	35 W	8 HP	-40..+85°C	Yes
17PU03-	PU3	36-48 VDC	25.2..60 V	21.6..67.2 V	3.3 V and 5 V	35 W	8 HP	-40..+85°C	Yes
17PU04-	PU4	72-110 VDC	50.4..137.5 V	43.2..154 V	3.3 V and 5 V	35 W	8 HP	-40..+85°C	Yes

Options

Input voltage	■ PU2: 24 VDC nom. (16.8..30 V) ■ PU3: 36-48 VDC nom. (25.2..60 V) (this product) ■ PU4: 72-110 VDC nom. (50.4..137.5 V)

Ordering Information

Standard PU3 Models	**0712-0003**	PU3 - 3U 8HP PSU, input 36 VDC nominal (25.2..45 V), output 5 V, 3.3 V, 35 W, H15 front/back, SMbus, external I/Os for key function, -40..+85°C screened, conformal coating
Related Hardware	**0712-0002**	PU2 - 3U 8HP PSU, input 24 VDC nominal (16.8..30 V), output 5 V, 3.3 V, 35 W, H15 front/back, SMbus, external I/Os for key function, -40..+85°C screened, conformal coating
	0712-0004	PU4 - 3U 8HP PSU, input 110 VDC nominal (77..137.5 V), output 5 V, 3.3 V, 35 W, H15 front/back, SMbus, external I/Os for key function, -40..+85°C screened, conformal coating
Software: Linux	This product is designed to work under Linux. See below for potentially available separate software packages from MEN.	
	13AD78-06	MDIS5™ low-level driver sources (MEN) for PU2, PU3, PU4, PU5, PU6 and CCA Rack PSU controller on SMBus
Software: Windows®	This product is designed to work under Windows®. See below for potentially available separate software packages from MEN.	
	13AD78-70	MDIS4™/2004 / MDIS5™ Windows® driver (MEN) for PU2, PU3, PU4, PU5, PU6 and CCA Rack PSU controller on SMBus
Software: VxWorks®	This product is designed to work under VxWorks®. For details regarding supported/unsupported board functions please refer to the corresponding software data sheets.	
	13AD78-06	MDIS5™ low-level driver sources (MEN) for PU2, PU3, PU4, PU5, PU6 and CCA Rack PSU controller on SMBus

For operating systems not mentioned here contact MEN sales.

Documentation	**20AD78-ER**	PSU PU2, PU3, PU4 Errata
	20AD78-00	PU2/PU3/PU4 User Manual

Contact Information

Germany

MEN Mikro Elektronik GmbH
Neuwieder Straße 3-7
90411 Nuremberg
Phone +49-911-99 33 5-0
Fax +49-911-99 33 5-901

info@men.de
www.men.de

France

MEN Mikro Elektronik SA
18, rue René Cassin
ZA de la Châtelaine
74240 Gaillard
Phone +33 (0) 450-955-312
Fax +33 (0) 450-955-211

info@men-france.fr
www.men-france.fr

USA

MEN Micro, Inc.
24 North Main Street
Ambler, PA 19002
Phone (215) 542-9575
Fax (215) 542-9577

sales@menmicro.com
www.menmicro.com

The date of issue stated in this data sheet refers to the Technical Data only. Changes in ordering information given herein do not affect the date of issue. All brand or product names are trademarks or registered trademarks of their respective holders.
MEN is not responsible for the results of any actions taken on the basis of information in the publication, nor for any error in or omission from the publication.
MEN expressly disclaims all and any liability and responsibility to any person, whether a reader of the publication or not, in respect of anything, and of the consequences of anything, done or omitted to be done by any such person in reliance, whether wholly or partially, on the whole or any part of the contents of the publication.
The correct function of MEN products in mission-critical and life-critical applications is limited to the environmental specification given for each product in the technical user manual.The correct function of MEN products under extended environmental conditions is limited to the individual requirement specification and subsequent validation documents for each product for the applicable use case and has to be agreed upon in writing by MEN and the customer.Should the customer purchase or use MEN products for any unintended or unauthorized application, the customer shall indemnify and hold MEN and its officers, employees, subsidiaries, affiliates, and distributors harmless against all claims, costs, damages, and expenses, and reasonable attorney fees arising out of, directly or indirectly, any claim or personal injury or death associated with such unintended or unauthorized use, even if such claim alleges that MEN was negligent regarding the design or manufacture of the part.
In no case is MEN liable for the correct function of the technical installation where MEN products are a part of.

Copyright © 2013 MEN Mikro Elektronik GmbH. All rights reserved.