EM9A – Embedded System Module COM with MPC8548

- **MPC8548 (or MPC8543), up to 1.5 GHz**
- **FPGA 33,216 LEs**
- **32-bit/33/66-MHz PCI**
- **Up to 2 GB onboard DDR2 SDRAM**
- **1 GB NAND Flash**
- **128 KB FRAM, 32 MB additional SDRAM**
- **3 Gb Ethernet, 2 COM (J3)**
- **User defined I/O functions optional via FPGA**
- **MENMON™ BIOS for PowerPC® cards**
- **-40 to +85°C screened**

The EM9A is a complete embedded SBC for use on any carrier board in different industrial environments. The final application consists of a stand-alone EM9A or an EM9A with an application-specific carrier card.

The EM9A is controlled by an integrated PowerPC® MPC8548 or MPC8543 processor (optionally with encryption unit) running at clock frequencies between 800 MHz and 1.5 GHz.
The EM9A is equipped with soldered DDR2 SDRAM for data and with NAND Flash for program storage. It provides access for three Gigabit Ethernet channels and two COM ports via its I/O connector J3.
Additional functionality such as graphics, touch, CAN bus, protocol converters etc. can be realized in an FPGA for the needs of the individual application. The corresponding connectors are available on a carrier board. Application software dynamically loads the functions of the FPGA.
The EM9A comes with MENMON™ support. This firmware/BIOS can be used for bootstrapping operating systems (from disk, Flash or network), for hardware testing, or for debugging applications without running any operating system.

The EM9A is a communication engine ideal for use in embedded applications, for instance as an embedded Linux server, but also for high-end automation and robot control under a real-time operating system.
For a first evaluation of the functions of the EM9A we strongly recommend to use the EK9 ESM™ starter kit. The kit consists of the function-compatible EM9 module (with front I/O), an FPGA loaded with additional I/O functions, the carrier card with I/O connectors, an external PSU, cables, and an adapter for mounting a PCI-104 module.

ESM™ modules consist of the hardware (CPU, chip set, memory, I/O) which is not fixed to any application-specific function, and an FPGA programmed in VHDL code, which provides I/O that is also still independent of a specific application. ESM™ modules are based on PCI. They have two or three system connectors: J1 has a fixed signal assignment, while J2 is variable depending on the final application-specific configuration of the ESM™ and the carrier board. J2 also feeds the I/O signals of the functions programmed in the FPGA to the carrier card. Some ESM™ modules have an additional J3 connector that is used to replace the front I/O connectors to route the signals to the carrier board or to the backplane of a CPCI or VME system.

mikro elektronik
gmbh · nürnberg

Diagram

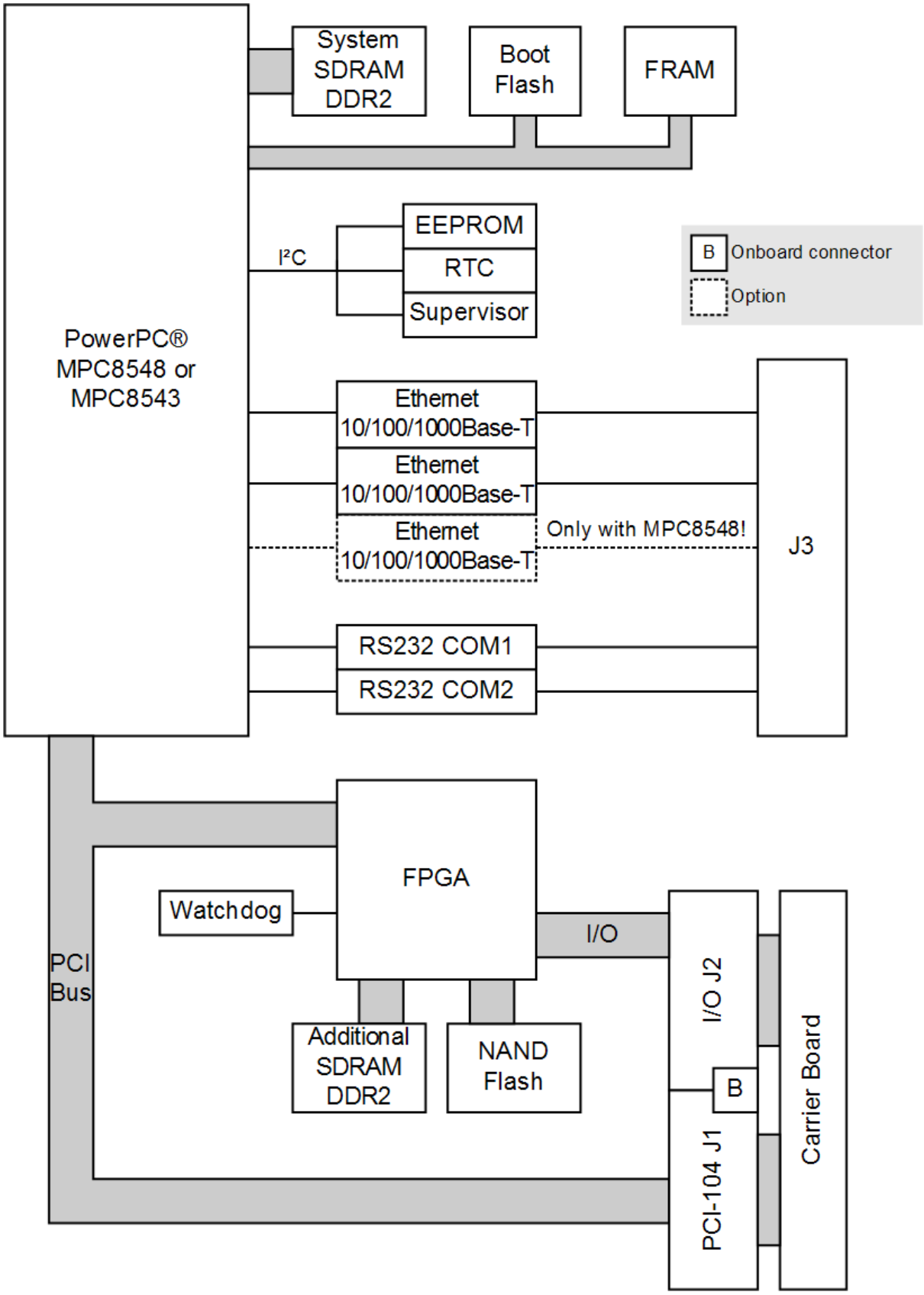
PowerPC®
MPC8548 or
MPC8543
System
SDRAM
DDR2
Boot
Flash
FRAM
I²C
EEPROM
RTC
Supervisor
B Onboard connector
Option
Ethernet
10/100/1000Base-T
Ethernet
10/100/1000Base-T
Ethernet
10/100/1000Base-T
Only with MPC8548!
J3
RS232 COM1
RS232 COM2
FPGA
Watchdog
I/O
PCI
Bus
Additional
SDRAM
DDR2
NAND
Flash
I/O J2
B
PCI-104 J1
Carrier Board

Technical Data

CPU	■ PowerPC® PowerQUICC™ III MPC8548, MPC8548E, MPC8543 or MPC8543E □ 800MHz up to 1.5GHz □ Please see Standard Configurations for available standard versions. □ e500 PowerPC® core with MMU and double-precision embedded scalar and vector floating-point APU □ Integrated Northbridge and Southbridge
Memory	■ 2x32KB L1 data and instruction cache, 512KB/256KB L2 cache integrated in MPC8548/MPC8543 ■ Up to 2GB SDRAM system memory □ Soldered □ DDR2 □ Up to 300 MHz memory bus frequency, depending on CPU ■ Up to 1GB soldered NAND Flash, FPGA-controlled ■ 32MB additional DDR2 SDRAM, FPGA-controlled, e.g. for video data and NAND Flash firmware ■ 16MB boot Flash ■ 128KB non-volatile FRAM ■ Serial EEPROM 4kbits for factory settings
Mass Storage	■ Parallel IDE (PATA) □ One port for hard-disk drives □ Available via I/O connector J2 □ FPGA-controlled □ PIO mode 0 and UDMA mode 5 (UDMA100) support ■ Up to 1GB soldered ATA NAND Flash, FPGA-controlled
Graphics	■ Available via I/O connector J2 ■ FPGA-controlled ■ 800 x 600, 60Hz/75Hz, 6-bit RGB
I/O	■ Three Ethernet channels □ Three 10/100/1000Base-T Ethernet channels with MPC8548/E □ Two 10/100/1000Base-T Ethernet channels with MPC8543/E □ On board-to-board connector J3 ■ Two RS232 UARTs (COM1/COM2) □ On board-to-board connector J3 □ Data rates up to 115.2kbit/s □ 16-byte transmit/receive buffer □ Handshake lines: CTS, RTS ■ Further I/O depending on FPGA configuration
FPGA	■ Standard factory FPGA configuration: □ Main bus interface □ Interrupt controller, reset controller □ 16Z070_IDEDISK - IDE controller for NAND Flash □ 16Z043_SDRAM - Additional SDRAM controller (32MB DDR2) □ 16Z016_IDE - IDE controller (PIO mode 0 and UDMA mode 5) □ 16Z044_DISP - Display controller (800 x 600, 60Hz/75Hz, 6-bit RGB) □ 16Z031_SPI - SPI touch panel controller □ 16Z125_UART - UART controller (controls COM10..COM12) □ 16Z034_GPIO - GPIO controller (8 I/O lines, system control signals) ■ The FPGA offers the possibility to add customized I/O functionality. See FPGA.
PCI Interface	■ 32-bit, 33/66-MHz PCI interface at PCI-104 connectors J1 and J2 ■ Compliant with PCI Specification 2.2 ■ Support of four external masters
Miscellaneous	■ Real-time clock ■ Temperature sensor, power supervision and watchdog

Technical Data

Electrical Specifications	■ Supply voltage/power consumption: □ +5V (-2%/+5%), 2A typ. □ +3.3V (-2%/+5%), 0.5A typ.
Mechanical Specifications	■ Dimensions: conforming to ESM™ specification (PCB: 149mm x 71mm), Type II-N, except height: approx. 1mm higher than standard ■ Heat sink is always tailor-made to the customer's needs (no heat sink included in standard version) ■ Weight: 90g (w/o heat sink)
Environmental Specifications	■ Temperature range (operation): □ -40..+85°C (screened), with appropriate heat sink □ Airflow: min. 10m³/h ■ Temperature range (storage): -40..+85°C ■ Relative humidity (operation): max. 95% non-condensing ■ Relative humidity (storage): max. 95% non-condensing ■ Altitude: -300m to + 3,000m ■ Shock: 15g/11ms ■ Bump: 10g/16ms ■ Vibration (sinusoidal): 1g/10..150Hz ■ Conformal coating on request
MTBF	■ 245,671h @ 40°C according to IEC/TR 62380 (RDF 2000)
Safety	■ PCB manufactured with a flammability rating of 94V-0 by UL recognized manufacturers
EMC	■ Tested according to EN 55022 (radio disturbance), IEC1000-4-2 (ESD) and IEC1000-4-4 (burst)
BIOS	■ MENMON™
Software Support	■ Linux ■ VxWorks® ■ QNX® (on request) ■ INTEGRITY® (Green Hills® Software) support available. Please contact Green Hills® for further information. ■ OS-9® (on request) ■ For more information on supported operating system versions and drivers see Downloads.

FPGA

This product offers the possibility to add customized I/O functionality in FPGA.

Flexible Configuration	■ Customized I/O functions can be added to the FPGA. ■ It depends on the board type, pin counts and number of logic elements which IP cores make sense and/or can be implemented. Please contact MEN for information on feasibility. ■ You can find more information on our web page "User I/O in FPGA"
FPGA Capabilities	■ FPGA Altera® Cyclone® II EP2C35 □ 33,216 logic elements □ 483,840 total RAM bits ■ Connection □ Total available pin count: 81 pins □ Functions available via I/O connector J2 ■ MEN offers a starter kit for a computer-on-module of the same product family (version with front I/O). The kit includes a suitable carrier board with different I/O connectors for FPGA signals. An FPGA development package for this hardware kit is also available for download.

Configuration & Options

Standard Configurations

Article No.	CPU Type	Clock	System RAM	NAND Flash	FRAM	Operating Temperature	Connectors
15EM09A00	MPC8548	1.33 GHz	512 MB	1 GB	128 KB	-40..+85°C	Board-to-board J3 and J2
15EM09-00	MPC8548	1.33 GHz	512 MB	1 GB	128 KB	-40..+85°C	Front I/O, board-to-board J2

Options

CPU	■ Several PowerQUICC™ III types with different clock frequencies ■ MPC8548 or MPC8548E □ 1 GHz, 1.2 GHz, 1.33 GHz or 1.5 GHz ■ MPC8543 or MPC8543E □ 800 MHz or 1 GHz
Memory	■ System RAM □ 512 MB, 1 GB or 2 GB ■ NAND Flash □ 0 MB up to 1GB ■ FRAM □ 0 KB or 128 KB ■ Boot Flash □ 8 MB or 16 MB
I/O	■ Ethernet □ Only two channels instead of three with MPC8543
FPGA Type	■ Altera® Cyclone® II EP2C20 instead of EP2C35 □ 18,752 logic elements □ 239,616 total RAM bits
Thermal Characteristics	■ The ESM™ module's heat sink is always tailor-made to the customer's thermal requirements.
Power Supply	■ Single +5V power supply (instead of +5V and +3.3V)
Mechanical	■ PCI and I/O connectors can also be placed for face-up assembly (ESM™ Type S)

Please note that some of these options may only be available for large volumes. Please ask our sales staff for more information.

Ordering Information

Standard EM9A Models	**15EM09A00**	MPC8548 / 1.33 GHz, 512 MB DDR2 DRAM, 1 GB NAND Flash, 32 MB graphics memory, 128 KB FRAM, onboard I/O 3 Gb Ethernet, 2 UARTs, no front I/O, without heat sink
Related Hardware	**08EK09-00**	ESM™ evaluation kit for EM9/EM9A: EM9 with PowerPC® MPC8548, 1.33GHz, 512MB SDRAM, 1GB NAND Flash, 128KB FRAM, 32MB graphics memory, front I/O: 3 Gigabit Ethernet, 1 UART - on mini ATX carrier board with 2 UARTs, 1 USB 2.0, graphics, GPIO, IDE, RJ45 to D-Sub cable, VGA cable, external PSU and adapter for mounting of one PCI-104 module, 0..+60°C
	15EM09-00	MPC8548 / 1.33 GHz, 512 MB DDR2 DRAM, 1 GB NAND Flash, 32 MB graphics memory, 128 KB FRAM, front I/O 3 Gigabit Ethernet and 1 UART on 4x RJ45, -40 to +85° C screened
	15XM50-00	MPC8548 / 1.33 GHz, 512 MB DDR2 DRAM, 2 MB SRAM, 128 KB FRAM, -40..+85°C screened
Software: Linux	This product is designed to work under Linux. See below for potentially available separate software packages from MEN.	
	10EM09-91	General Linux BSP for A17, EM9, EM9A, EK9, F50C, F50P and XM50
	13Z017-06	MDIS5™ low-level driver sources (MEN) for 16Z034_GPIO and 16Z037_GPIO
	13Z025-90	Linux native driver (MEN) for 16Z025_UART, 16Z057_UART and 16Z125_UART
	13Z044-90	Linux native driver (MEN) for 16Z044_DISP (frame buffer)
Software: VxWorks®	This product is designed to work under VxWorks®. For details regarding supported/unsupported board functions please refer to the corresponding software data sheets.	
	10EM09-60	VxWorks® BSP (MEN) for A17, EK9, EM9, EM9A, F50C, F50P and XM50
	13Z017-06	MDIS5™ low-level driver sources (MEN) for 16Z034_GPIO and 16Z037_GPIO
	13Z025-60	VxWorks® native driver (MEN) for 16Z025_UART, 16Z057_UART and 16Z125_UART
Software: QNX®	This product is designed to work under QNX®. For details regarding supported/unsupported board functions please refer to the corresponding software data sheets.	
	13Z017-06	MDIS5™ low-level driver sources (MEN) for 16Z034_GPIO and 16Z037_GPIO
	13Z025-40	QNX® 6.3 native driver (MEN) for 16Z025_UART and 16Z125_UART
	13Z025-41	QNX® 6.4 native driver (MEN) for 16Z025_UART and 16Z125_UART
	13Z025-42	QNX® 6.5 native driver (MEN) for 16Z025_UART and 16Z125_UART
	13Z044-40	QNX® native driver (MEN) for 16Z044_DISP (frame buffer)
Software: INTEGRITY®	This product is designed to work under the INTEGRITY® RTOS from Green Hills® Software. An INTEGRITY® Board Support Package for this board is provided by Green Hills® Software. For more information and product support please contact Green Hills® Software (www.ghs.com).	
Software: Firmware/BIOS	MENMON™ is MEN's firmware/BIOS for PowerPC® platforms.	
	14EM09-00	MENMON™ (Firmware) (MEN) for EM9, EM9A and EK9 (object code)

For operating systems not mentioned here contact MEN sales.

Ordering Information

Documentation	Compare Chart ESM™ Embedded System Modules » Download	
	20EM00-00	ESM™ Specification
	20EM09-00	EM9/EM9A User Manual
	21MENM-00	MENMON™ User Manual
	21Z025-90	16Z025_UART and 16Z125_UART under Linux User Manual
	22Z125-ER	16Z125_UART Errata

Contact Information

Germany

MEN Mikro Elektronik GmbH
Neuwieder Straße 3-7
90411 Nuremberg
Phone +49-911-99 33 5-0
Fax +49-911-99 33 5-901

info@men.de
www.men.de

France

MEN Mikro Elektronik SA
18, rue René Cassin
ZA de la Châtelaine
74240 Gaillard
Phone +33 (0) 450-955-312
Fax +33 (0) 450-955-211

info@men-france.fr
www.men-france.fr

USA

MEN Micro, Inc.
24 North Main Street
Ambler, PA 19002
Phone (215) 542-9575
Fax (215) 542-9577

sales@menmicro.com
www.menmicro.com

The date of issue stated in this data sheet refers to the Technical Data only. Changes in ordering information given herein do not affect the date of issue. All brand or product names are trademarks or registered trademarks of their respective holders.
MEN is not responsible for the results of any actions taken on the basis of information in the publication, nor for any error in or omission from the publication.
MEN expressly disclaims all and any liability and responsibility to any person, whether a reader of the publication or not, in respect of anything, and of the consequences of anything, done or omitted to be done by any such person in reliance, whether wholly or partially, on the whole or any part of the contents of the publication.
The correct function of MEN products in mission-critical and life-critical applications is limited to the environmental specification given for each product in the technical user manual.The correct function of MEN products under extended environmental conditions is limited to the individual requirement specification and subsequent validation documents for each product for the applicable use case and has to be agreed upon in writing by MEN and the customer.Should the customer purchase or use MEN products for any unintended or unauthorized application, the customer shall indemnify and hold MEN and its officers, employees, subsidiaries, affiliates, and distributors harmless against all claims, costs, damages, and expenses, and reasonable attorney fees arising out of, directly or indirectly, any claim or personal injury or death associated with such unintended or unauthorized use, even if such claim alleges that MEN was negligent regarding the design or manufacture of the part.
In no case is MEN liable for the correct function of the technical installation where MEN products are a part of.

Copyright © 2013 MEN Mikro Elektronik GmbH. All rights reserved.