Thermal Mounting Pad (TMP) Accessory

SIL-PAD® 2000

FEATURES

TMP-1XX
Provides thermal transfer for Interpoint® converters
0.010 inch (0.254 mm) thickness
All holes for leads are 0.100 ±0.005 inches
Color is whi**te**

From Henkel/Bergquist information for SIL-PAD® 2000
Temperature rating of -60°C to +200°C
0.33°C in^2/W (213 °C mm^2/W) at 50 PSI (345 kPa)
0.20°C in^2/W (129 °C mm^2/W) at 200 PSI (1379 kPa)
4000 Vac typical dielectric breakdown voltage

Outgassing % typical [1]
TML 0.26, CVCM 0.11, WVR 0.02

See pages 10 and 11 for detailed information on the SIL-PAD® 2000 from Henkel/Bergquist.

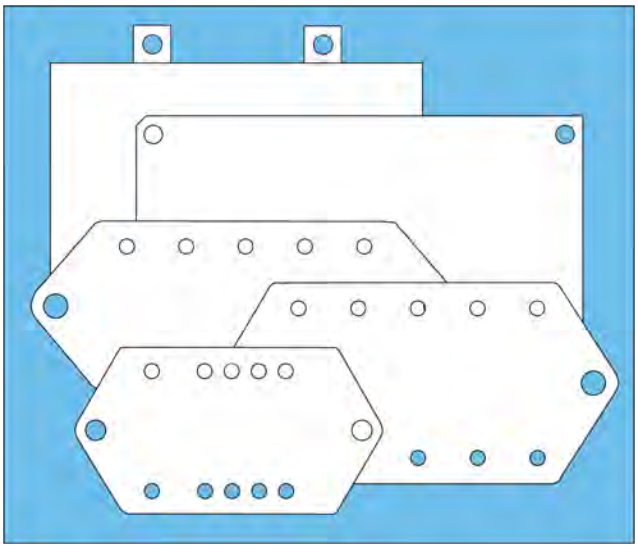

DESCRIPTION

Interpoint® accessory, thermal mounting pads (TMP), provide a simple and effective method of ensuring a low thermal impedance path between a DC-DC converter and its mounting plane. When placed between the converter and circuit board or heat sink, it will provide electrical isolation and fill small surface irregularities,

The TMP-1XX provides a thermal impedance of 0.33°C in^2/W (213 °C mm^2/W) at 50 PSI (345 kPa) or 0.20°C in^2/W (129 °C mm^2/W) at 200 PSI (1379 kPa).

MATERIAL

The TMPs, made of silicone rubber and fiberglass, are thermally stable and non-flammable. They are non-toxic, do not require grease and do not exhibit the cracking problems of ceramic materials. The pads may temporarily react to some cleaning agents (notably chlorinated hydrocarbons) by swelling, but are not damaged after the solvent is removed. They will tolerate soldering process temperatures.

There is no shelf-life limitation for TMPs. The TMP thermal pads do not have a surface adhesive and will remain stable for long periods of time given proper storage conditions.

SPACE APPLICATIONS

NASA's list of material evaluated to be acceptable for use in space applications is based on low outgassing (TML) and low volatile-condensate (CVCM). TMP-1xx uses Henkel/Bergquist SIL-PAD 2000 material which fits this category. TMP-0xx uses SIL-PAD 1500, and it is not on NASA's list as acceptable for space use.

MOUNTING

All holes for leads are 0.100 ±0.005 (2.54 ±0.13 mm).

For maximum thermal conduction from the converter through the thermal pad to the thermal plane, a mounting pressure of 50 PSI or 345 kPa is recommended. The mounting pressure is achieved by applying appropriate torque values to the mounting screws. The screw torque values should be based on the type of the screws, materials, lubrications, and the locking methods.

For questions please contact Applications Engineering at +1 425-882-3100, email powerapps@craneae.com or fill out a Technical Inquiry Form at https://www.interpoint.com/contact/technical_support.

Note 1. Total mass loss in vacuum (TML), collected volatile condensible material (CVCM), water vapor regain (WVR).

Thermal Mounting Pad (TMP) Accessory

TMP NUMBER CROSS REFERENCE TO DC-DC CONVERTERS

TABLE 1: TMP CROSS REFERENCE - PRODUCT SERIES ARE IN ALPHABETICAL ORDER

APPLICATION	DC-DC CONVERTER FAMILY (BASE MODEL[1])	CASE STYLE (REFER TO DATASHEET)	TMP-1XX [2]	TMP-0XX [2] CROSS REFERENCE [3]
High Reliability	GFM Series™ (flanged)	J8	115	NA
High Reliability	MFK Series™ Dual (includes 28S)	G6	114	NA
High Reliability	MFK Series™ Single (except 28S)	G5	108	NA
High Reliability	MFL Series™	U, V	101	001
High Reliability/ Space	MFP Series™ (flanged, side-leaded)	D5	117	NA
High Reliability	MFX Series™	J7	109	NA
High Reliability	MHF+ Series™ Single and Dual	G1	105	005
High Reliability	MHF+ Series™ Triple	G2	105	005
High Reliability	MHP270 Series™	U	101	001
High Reliability	MHV Series™ Single and Dual	K3	103	003
High Reliability	MHV Series™ Triple	J1	102	002
High Reliability	MOR Series™	U2, V	101	001
High Reliability	MOR Series™	W, Y, Z	107	007
High Reliability	MSA+ Series™	D6	118	
High Reliability	MTR Series™ Single and Dual	K5	103	003
High Reliability	MTR Series™ Triple	J1	102	002
High Reliability	MWR Series™	J1	102	002
Space	SMFL Series™	U	101	NA
Space	SMFLHP Series™	U	101	NA
Space	SMHF Series™	G1	105	NA
Space	SMHF42 Series™	G1	105	NA
Space	SMP120 Series™	S1	116	
Space	SMRT Series™	S	110	NA
Space	SMTR Series™	K3	103	NA
Special Product	LCM-120 Series™	U	101	NA

Notes
1. The Series trademarks listed above are the property of Crane Electronics, Inc.
2. All holes for leads are 0.100 ±0.005 (2.54 ±0.13 mm).
3. The cross reference matches TMP-1XX (made from SIL-PAD 2000) to the previous TMP-0XX (made from SIL-PAD 1500). TMP-0XX is not recommended for new design.

Thermal Mounting Pad (TMP) Accessory

THERMAL PAD DIMENSIONS (NOT TO SCALE)

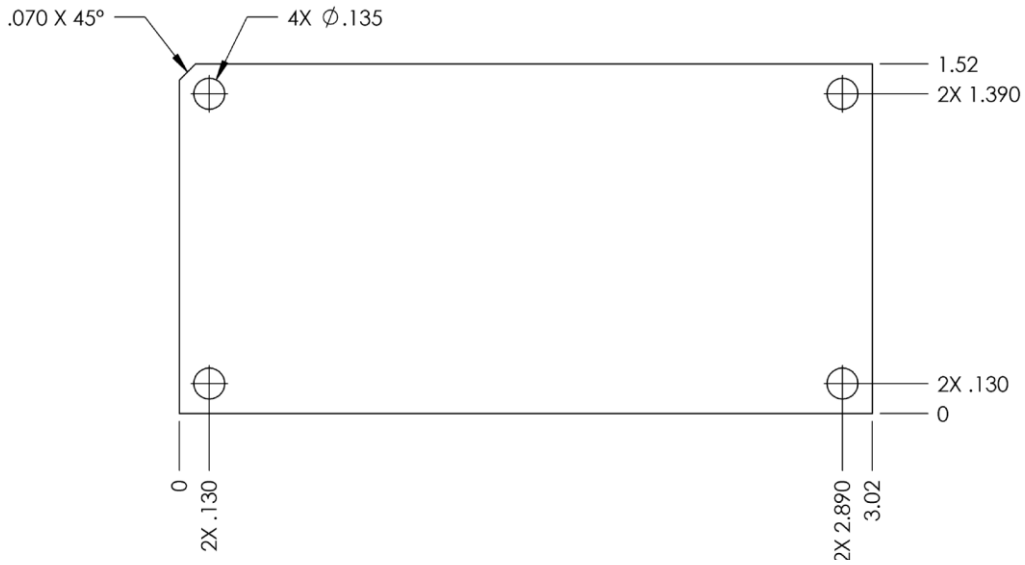

FIGURE 1: TMP-101

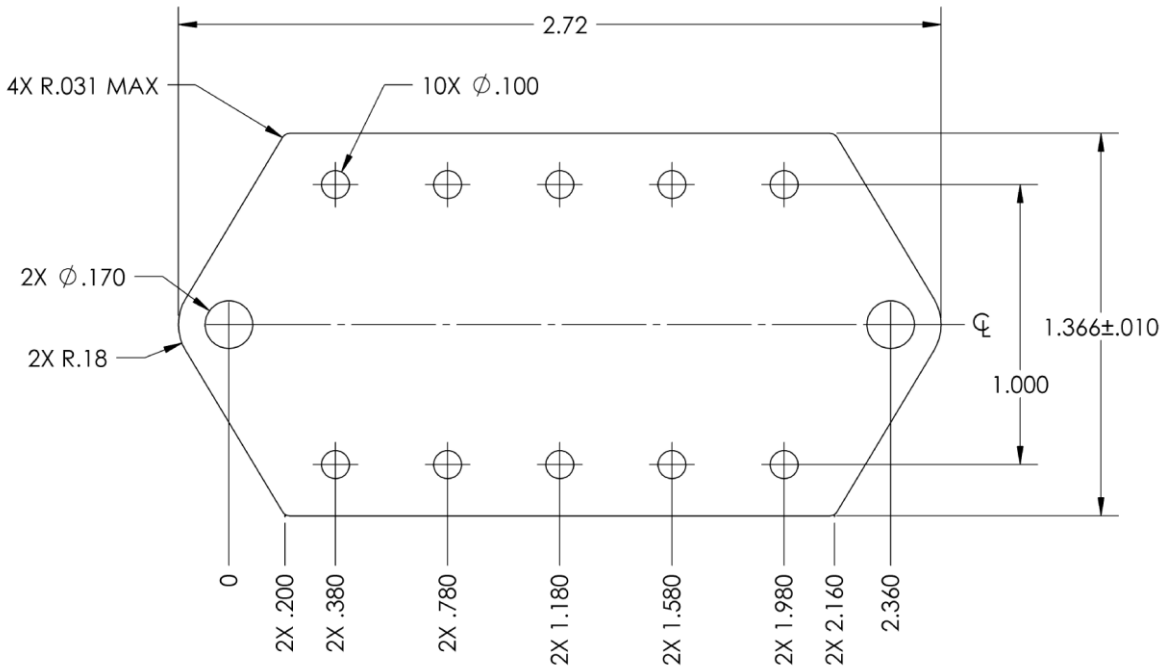

FIGURE 2: TMP-102

Thermal Mounting Pad (TMP) Accessory

THERMAL PAD DIMENSIONS (NOT TO SCALE)

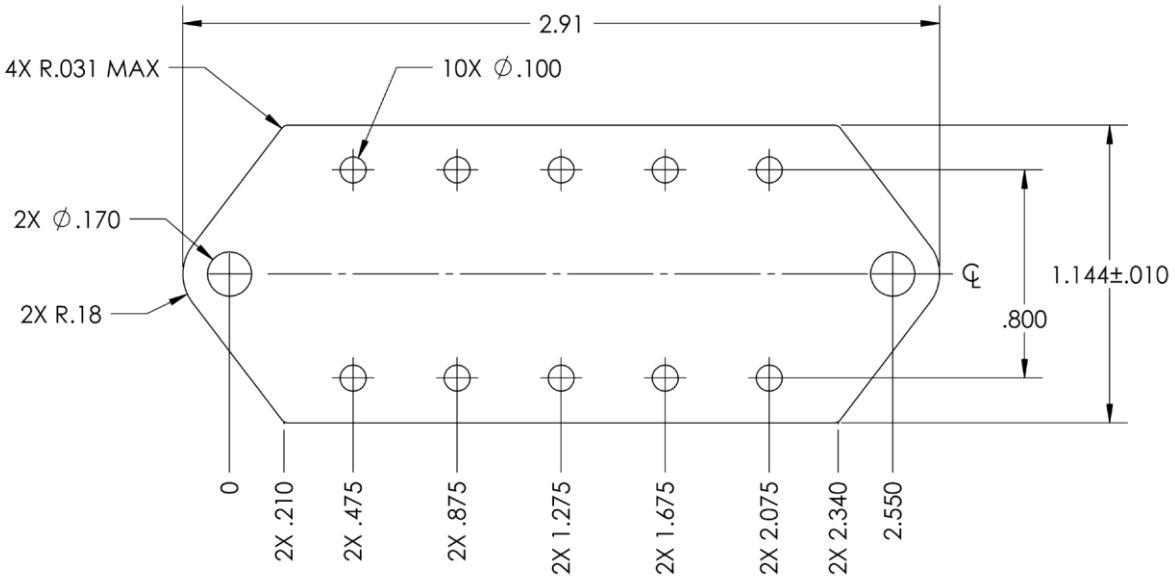

FIGURE 3: TMP-103

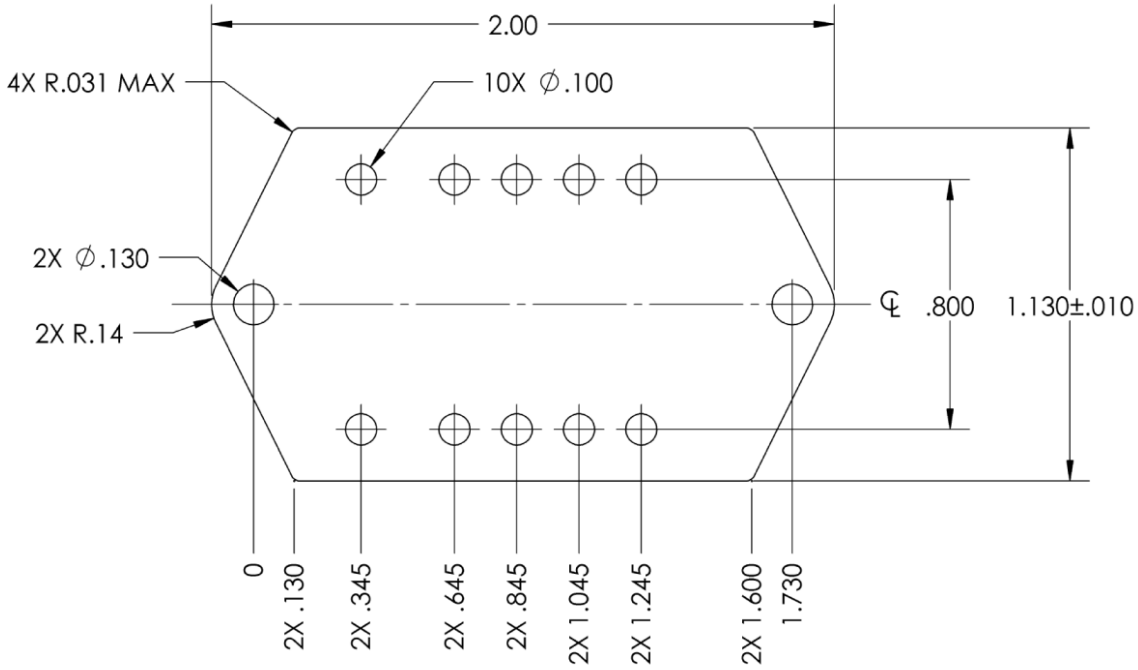

FIGURE 4: TMP-105

Thermal Mounting Pad (TMP) Accessory

THERMAL PAD DIMENSIONS (NOT TO SCALE)

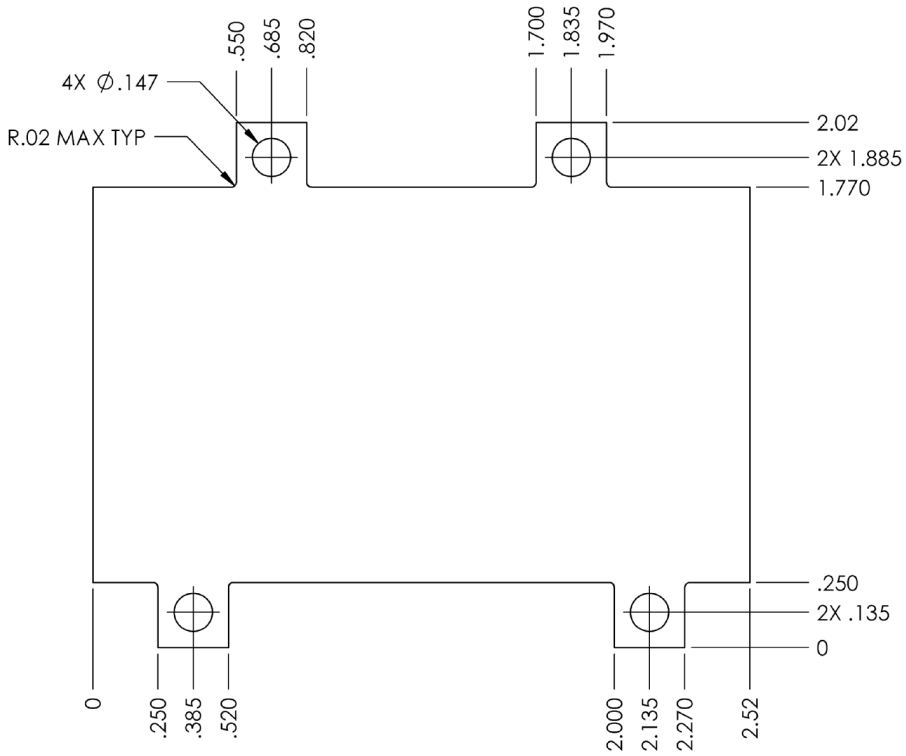

FIGURE 5: TMP-107

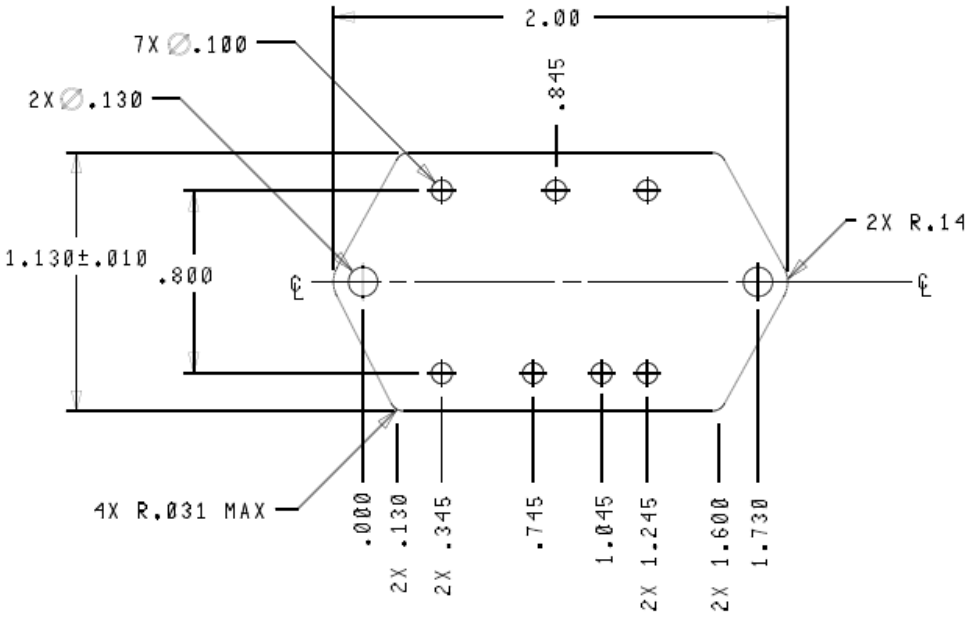

FIGURE 6: TMP-108

Thermal Mounting Pad (TMP) Accessory

THERMAL PAD DIMENSIONS (NOT TO SCALE)

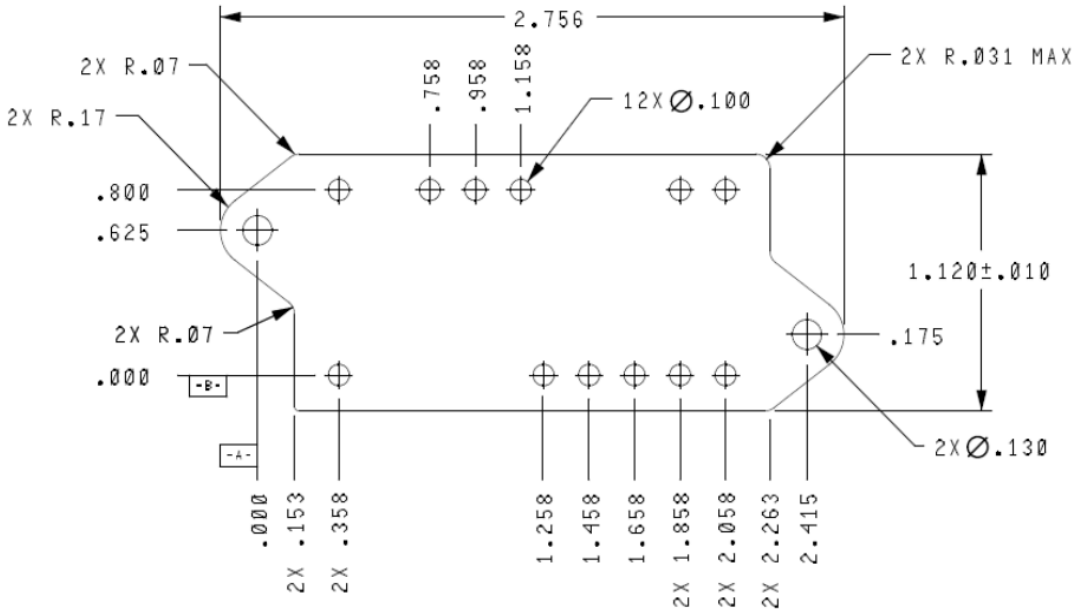

FIGURE 7: TMP-109

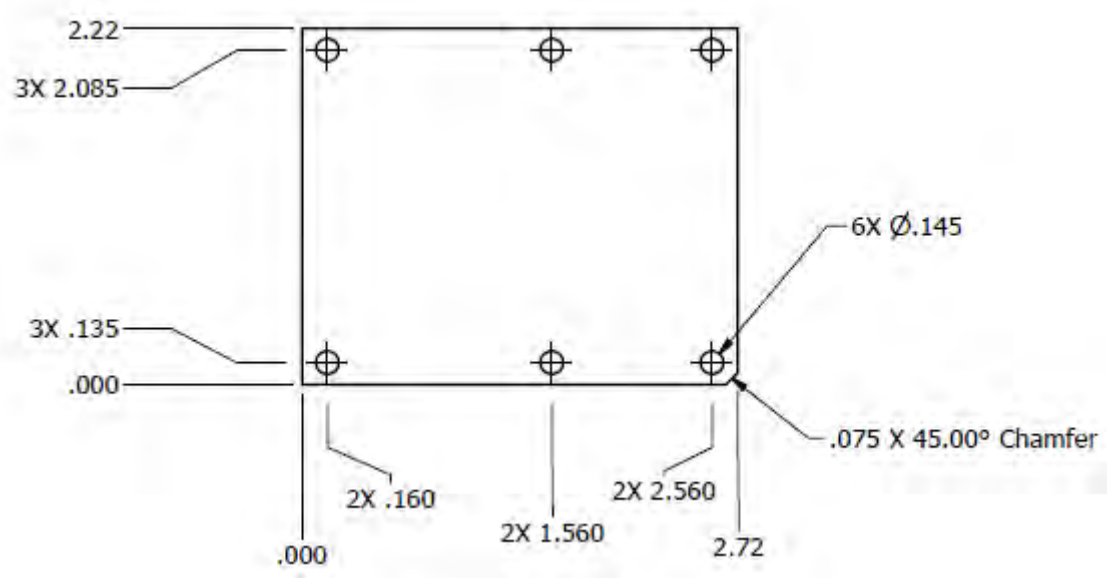

FIGURE 8: TMP-110

Thermal Mounting Pad (TMP) Accessory

THERMAL PAD DIMENSIONS (NOT TO SCALE)

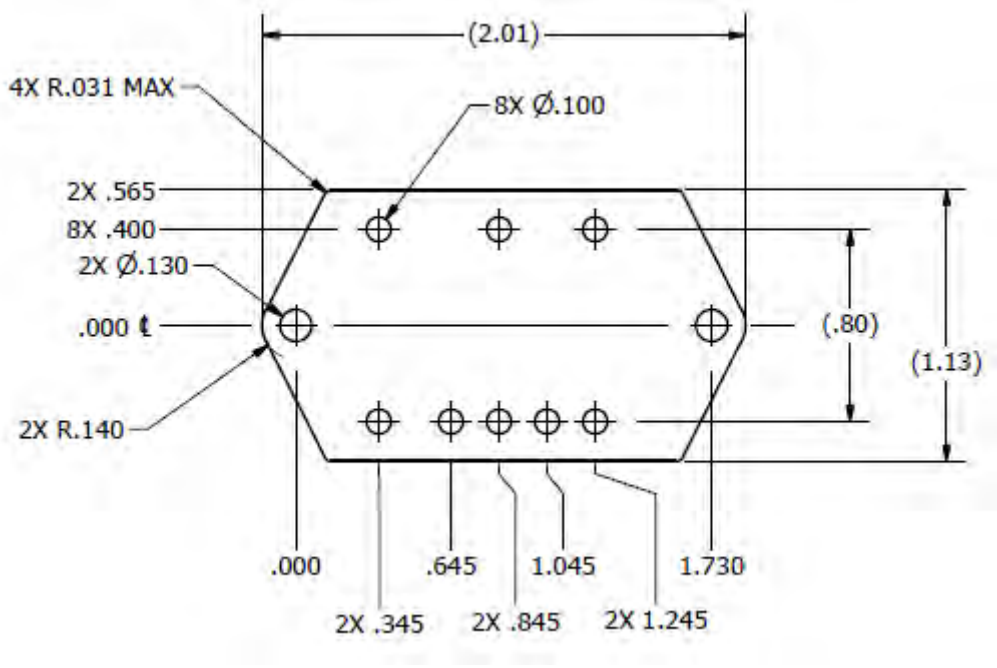

FIGURE 9: TMP-114

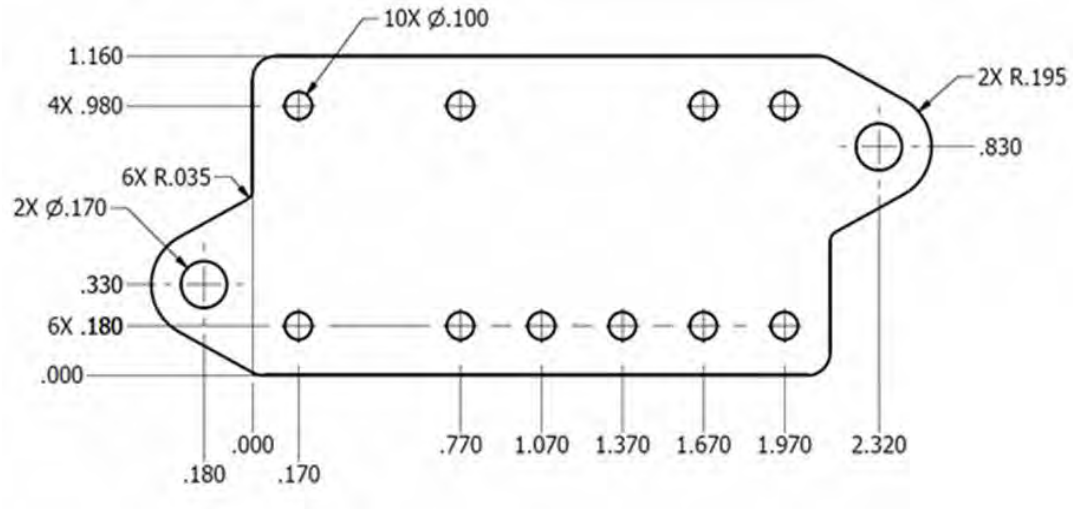

FIGURE 10: TMP-115

Thermal Mounting Pad (TMP) Accessory

THERMAL PAD DIMENSIONS (NOT TO SCALE)

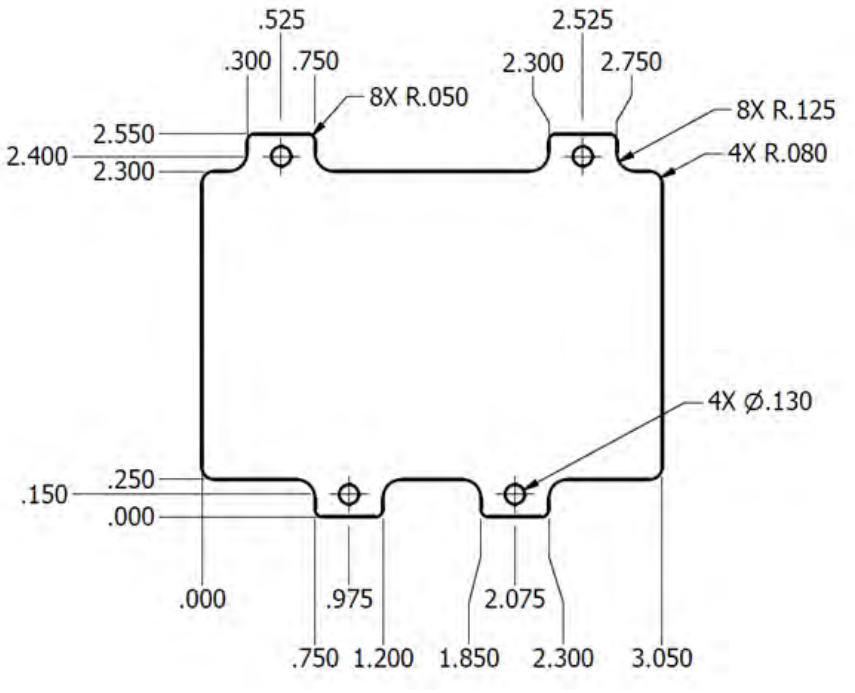

FIGURE 11: TMP-116

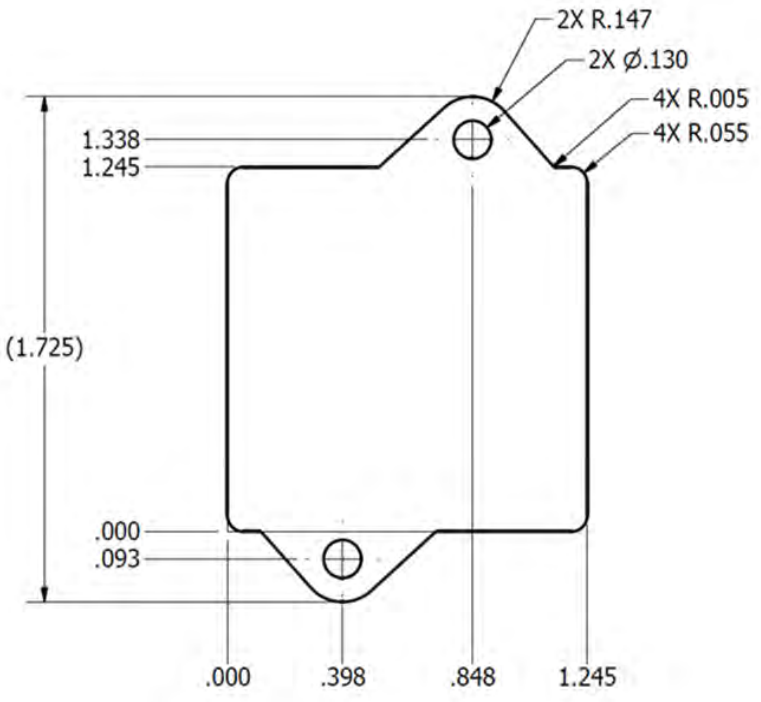

FIGURE 12: TMP-117

Thermal Mounting Pad (TMP) Accessory

THERMAL PAD DIMENSIONS (NOT TO SCALE)

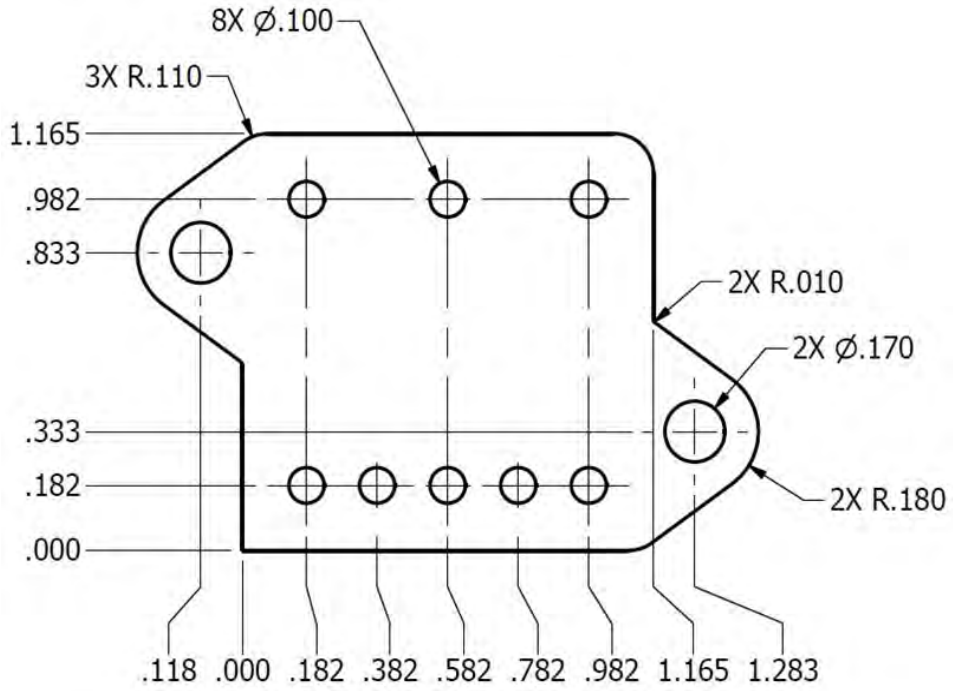

FIGURE 13: TMP-118

Thermal Mounting Pad (TMP) Accessory

TMP IS MANUFACTURED FROM HENKEL'S SIL-PAD 2000

BERGQUIST®

Technical Data Sheet

BERGQUIST SIL PAD TSP 3500

Known as BERGQUIST SIL-PAD 2000
November 2018

PRODUCT DESCRIPTION

Higher Performance, High Reliability Insulator.

Technology	Silicone
Appearance	White
Reinforcement Carrier	Fiberglass
Total Thickness , ASTM D374	0.254 to 0.508mm
Application	Thermal management, Thermally conductive adhesive
Operating Temperature Range	-60 to 200°C

FEATURES AND BENEFITS

- Thermal impedance: 0.33°C-in²/W @ 50 psi
- Optimal heat transfer
- High Thermal Conductivity: 3.5 W/m-K

TYPICAL APPLICATIONS

- Power supplies
- Motor controls
- Power semiconductors
- Aerospace
- Avionics

BERGQUIST SIL PAD TSP 3500 is a high performance, thermally conductive insulator designed for demanding aerospace and commercial applications. BERGQUIST SIL PAD TSP 3500 is a silicone elastomer formulated to maximize the thermal and dielectric performance of the filler/binder matrix .

The result is a grease-free, conformable material capable of meeting or exceeding the thermal and electrical requirements of high reliability electronic packaging applications.

TYPICAL PROPERTIES

Physical Properties	
Hardness, Shore A, ASTM D2240	90
Flammability Rating, UL 94	V-0
Electrical Properties	
Dielectric Breakdown Voltage , ASTM D149, Vac	4,000
Dielectric Constant, ASTM D150 @ 1,000 Hz	4.0
Volume Resistivity, ASTM D257, ohm-meter	1×10^{11}
Thermal Properties	
Thermal Conductivity , ASTM D5470, W/(m-K)	3.5

Thermal Performance vs. Pressure

TO-220 Thermal Performance	
@ 0.01"	
@ 10 psi	2.61
@ 25 psi	2.32
@ 50 psi	2.02
@ 100 psi	1.65
@ 200 psi	1.37
Thermal Impedance	
@ 0.01"	
@ 10 psi	0.57
@ 25 psi	0.43
@ 50 psi	0.33
@ 100 psi	0.25
@ 200 psi	0.2

I) The ASTM D5470 test fixture was used. The recorded value includes interfacial thermal resistance. These values are provided for reference only. Actual application performance is directly related to the surface roughness, flatness and pressure applied.

GENERAL INFORMATION

For safe handling information on this product, consult the Safety Data Sheet, (SDS).

Not for product specifications

The technical data contained herein are intended as reference only. Please contact your local quality department for assistance and recommendations on specifications for this product.

CONFIGURATIONS AVAILABLE

BERGQUIST SIL PAD TSP 3500 are supplied in:

- Sheet form and die-cut parts
- With or without pressure-sensitive adhesive

Conversions

(°C x 1.8) + 32 = °F
kV/mm x 25.4 = V/mil
mm / 25.4 = inches
N x 0.225 = lb
N/mm x 5.71 = lb/in
psi x 145 = N/mm²
MPa = N/mm²
N·m x 8.851 = lb·in
N·m x 0.738 = lb·ft
N·mm x 0.142 = oz·in
mPa·s = cP

Go to URL below to see original pdf with Henkel disclaimer on page 2
http://tds.loctite.com/tds5/Studio/ShowPDF/BERGQUIST%20SIL%20PAD%20TSP%203500-EN?pid=BERGQUIST%20SIL%20PAD%20TSP%203500&format=MTR&subformat=HYS&language=EN&plant=WERCS

Henkel

Thermal Mounting Pad (TMP) Accessory

TMP IS MANUFACTURED FROM HENKEL'S SIL-PAD 2000

Typical Outgassing Data [1], Bergquist Thermal Products

Date: January 19, 2016, REV: 1-19-16
Tests Performed In Accordance with: ASTM E-595, NASA SP-R-0022A

TML = total mass loss in vacuum
CVCM = collected volatile condensable material
WVR = water vapor regain

Material	Post Cure	TML %	CVCM %	WVR %
SP 2000	----	0.26	0.11	0.02
SP 2000	24hr/175°C/Air	0.07	0.03	0.01

1. Information provided by Henkel.

NASA's list of material evaluated to be acceptable for use in space applications is based on low outgassing (TML) and low volatile-condensate (CVCM). TMP-1xx uses Henkel/Bergquist 2000 material which fits this category. 2000 material which fits this category.

Thermal Mounting Pad (TMP) Accessory

SIL-PAD® 1500 IS NOT RECOMMENDED FOR NEW DESIGN

- Temperature rating of -60°C to +200°C
- Provides thermal transfer for Interpoint converters
- Thermal impedance 0.46°C in^2/W (268°C mm^2/W) at 50 psi
- Breakdown voltage 4000 VAC

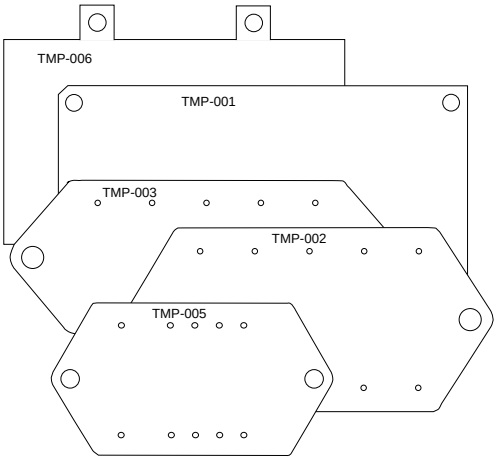

DESCRIPTION

Interpoint® accessory, thermal mounting pads (TMP), provide a simple and effective method of ensuring a low thermal impedance path between a DC-DC converter and its mounting plane. When placed between the converter and circuit board or heat sink, they provide electrical isolation, fill small surface irregularities, and produce a 0.46°C in^2/W (268°C mm^2/W) thermal impedance path.

MATERIAL

The TMPs, made of silicone rubber and fiberglass, are thermally stable and non-flammable. They are non-toxic, do not require grease and do not exhibit the cracking problems of ceramic materials. The pads may temporarily react to some cleaning agents (notably chlorinated hydrocarbons) by swelling, but are not damaged after the solvent is removed. They will tolerate soldering process temperatures.

There is no shelf-life limitation for TMPs. The TMP thermal pads do not have a surface adhesive and will remain stable for long periods of time given proper storage conditions.

MOUNTING

For maximum thermal conduction from the converter through the thermal pad to the thermal plane, a mounting pressure of 50 PSI or 345 kPa is recommended.. To achieve this level of mounting pressure, we recommend using our flanged converter models. The formula to calculate the recommended pressure is P=(T*N)/(0.2*D*A); where P=pressure in PSI, T=torque, N=number of fasteners, D=fastener diameter (in inches), A=contact surface area (in square inches).

CHARACTERISTIC	TYPICAL VALUE (unless otherwise noted)
Color	Green
Thermal Impedance, °C in^2/W, @ 50 psi	0.46 (268°C mm^2/W)
Dielectric Constant	4.00
Continuous Use Temperature, °C Thermal Conductivity, (W/meter – °K)	-160 to +200 2.00
Thickness	0.010 ±0.001 inches (0.254 ±0.025 mm)
Breakdown Voltage (per ASTM D149)	4000 Vac

Note 1. Total mass loss in vacuum (TML), collected volatile condensible material (CVCM), water vapor regain (WVR)

TMP Rev AB - 2019.07.17. This revision supersedes all previous releases. All technical information is believed to be accurate, but no responsibility is assumed for errors or omissions. Crane Electronics, Inc. reserves the right to make changes that do not affect form, fit or function of Class H products or specifications without notice. Interpoint is a registered trademark of Crane Co. All Series trademarks are trademarks of Crane Electronics, Inc. Sil-Pad® is a registered trademark of Henkel AG & Co. Copyright © 1999 - 2019 Crane Electronics, Inc. All rights reserved. www.craneae.com/interpoint