FEATURES

- **–55°C to +85°C operation**
- **4 to 8 VDC input**
- Fully isolated
- Opto-coupler feedback
- Fixed frequency, 210 kHz typ.
- Inhibit function
- Indefinite short circuit protection
- Up to 80% efficiency

DC/DC CONVERTERS 5 VOLT INPUT

MHL SERIES 15 WATT



MODELS VDC OUTPUT
DUAL
±12
±15

Size (max.): Non-flanged, case F4
1.950 x 1.350 x 0.505 inches (49.53 x 34.29 x 12.83 mm)
Flanged, case J5
2.720 x 1.350 x 0.505 inches (69.09 x 34.29 x 12.83 mm)
See Section B8, cases F4 and J5, for dimensions.
Weight: 57 grams typical
Screening: Standard or ES. See Section C2 for screening options, see Section A5 for ordering information.

DESCRIPTION

The MHL Series™ of DC/DC converters offers either ±12 or ±15 volt outputs in a single package. MHL converters offer the high efficiency and wide input range of switching regulators with excellent load and line regulation. Input and output grounds are isolated from one another and from case ground. No external components are required for operation. The units are built using thick-film hybrid technology and are sealed in metal packages for military, aerospace, and other high-reliability applications. Unscreened models are sealed with solder and are guaranteed to pass a gross leak test (maximum leak rate of 1 x 10^{-3} atm.-cc/sec). Environmentally screened models (/ES) are hermetically sealed with solder and will pass a fine leak and gross leak test as described in Section C2.

The MHL converters employ pulse-width modulated switching regulator techniques in the forward mode, with a nominal clock frequency of 210 kHz. Isolation is achieved through the use of a transformer in the forward power circuit and an opto-coupler in the feedback/control loop. The full load output power (15 watts) is available over the input range of 4 to 8 VDC. Up to 14.3 watts can be obtained from a single output up to a combined load of 15 watts.

Typical Performance Curve

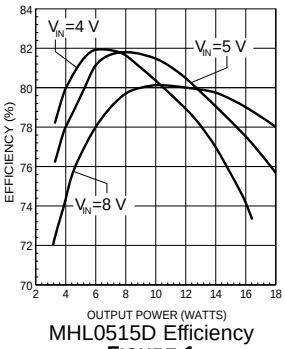

MHL0515D Efficiency
FIGURE 1

The efficiency is high over the entire input voltage range and from approximately 25% of full load to full load. This feature makes the converters ideal for either battery or aircraft power applications.

An inhibit function is provided to allow power shut-down and start-up from a logic input. An open circuit on the inhibit terminal produces normal operation, and a low level disables the converter. Input current in the inhibit mode is typically 20 mA. The converter features a “soft-start” function which provides a controlled 20 millisecond turn-on upon application of input power or inhibit release.

An input filter is incorporated in the unit to reduce input reflected ripple current. Both outputs are indefinitely protected against short circuits to ground or to one another by automatic current limiting circuitry. This feature adjusts the converter’s output current, indefinitely maintaining it below approximately 125% of the rated maximum during a full short circuit condition.

The MHL Series of converters is rated to operate at full load at a case temperature of 85°C, with the output power derated linearly to zero at 115°C (0.5W/°C). Because of the unit’s high efficiency, heat sinking requirements are minimized, but due consideration should be given to removing self-generated heat when operating the device at maximum ratings. To increase dissipation, heat conducting material (PCB, copper sheet, heat sink, or Interpoint’s TMP accessory) should be brought into contact with the converter’s baseplate.

When the MHL is used in applications requiring full-power operation for extended periods of time, or in shock and vibration environments, it is highly recommended that the flange-mount case option be used. This option provides improved thermal transfer capabilities as well as mechanically secure mounting configuration.

MHL SERIES
15 WATT

DC/DC CONVERTERS

ABSOLUTE MAXIMUM RATINGS

Input Voltage
- 4 to 8 VDC

Output Power
- 15 watts

Lead Soldering Temperature (10 sec per lead)
- 300°C

Storage Temperature Range (Case)
- –55°C to +125°C

RECOMMENDED OPERATING CONDITIONS

Input Voltage Range
- 4 to 8 VDC continuous

Case Operating Temperature (Tc)
- –55°C to +85°C full power
- –55°C to +115°C absolute

Derating Output Power/Current
- Linearly from 100% at 85°C to 0% at 115° C

MODEL NUMBERING KEY

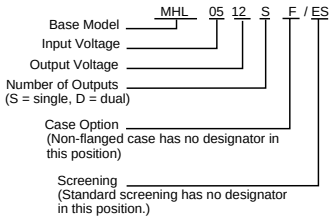

INHIBIT

Inhibit TTL Open Collector
- Logic low (output disabled)
- Referenced to input common
- Logic high (output enabled)
  Open collector

TYPICAL CHARACTERISTICS

Output Voltage Temperature Coefficient
- 150 ppm/°C, typical

Input to Output Capacitance
- 80 pF typical

Isolation
- 100 megohm minimum at 500 V

Conversion Frequency
- 210 kHz, typical

Electrical Characteristics: 25°C Tc, 5 VDC Vin, 100% load, unless otherwise specified.

		MHL0512D			MHL0515D			
PARAMETER	**CONDITIONS**	**MIN**	**TYP**	**MAX**	**MIN**	**TYP**	**MAX**	**UNITS**
OUTPUT VOLTAGE	$+V_{OUT}$	11.88	12.00	12.12	14.85	15.00	15.15	VDC
	$-V_{OUT}$	11.88	12.00	12.12	±14.85	15.00	15.15	
OUTPUT CURRENT[1]		—	—	1.25	—	—	1.00	A
OUTPUT POWER[1]	Tc = –55°C TO +85°C	—	—	15.0	—	—	15.0	W
OUTPUT RIPPLE	BW = 1 MHz	—	40	100	—	40	120	mV p-p
LINE REGULATION	$+V_{OUT}$	—	0.05	0.10	—	0.05	0.10	%
4 TO 8 V_{IN}	$-V_{OUT}$	—	0.05	0.15	—	0.05	0.15	
LOAD REGULATION	$+V_{OUT}$	—	0.05	0.15	—	0.03	0.10	%
NO LOAD TO FULL	$-V_{OUT}$	—	0.25	0.50	—	0.20	0.40	
CROSS REGULATION[2]	$+V_{OUT}$	—	2.2	3.5	—	1.9	3.0	%
	$-V_{OUT}$	—	2.2	3.5	—	1.9	3.0	
INPUT VOLTAGE	Tc = –55°C TO +85°C	4	5	8	4	5	8	VDC
INPUT CURRENT	NO LOAD	—	120	150	—	140	180	mA
	FULL LOAD	—	—	4500	—	—	4500	
	INHIBITED	—	20	—	—	20	—	
INPUT RIPPLE CURRENT		—	50	120	—	70	150	mA p-p
EFFICIENCY	FULL LOAD	—	78	—	—	78	—	%

Notes
1. 95% of the maximum current or power is available from either output. The total of both outputs must not exceed the maximum specification.
2. The effect on the positive output when it is held at 50 mA while the negative output is varied from 50 to 950 mA. The effect on the negative output when it is held at 50 mA while the positive output is varied from 50 to 950 mA.

PIN OUT

Pin	Designation
1,2	Positive Input
3	Positive Output
4	Output Common
5	Negative Output
6	No Connection
7	Case Ground
8	Inhibit
9, 10	Input Common

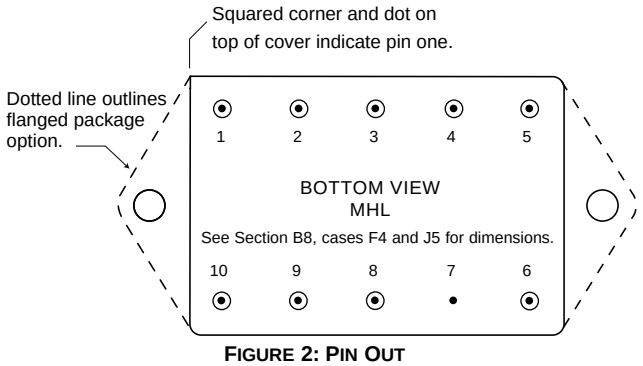

FIGURE 2: PIN OUT

23002-001-DTS Rev A DQ# 1018
All technical information is believed to be accurate, but no responsibility is assumed for errors or omissions. Interpoint reserves the right to make changes in products or specifications without notice. MHL Series is a trademark of Interpoint. Copyright © 1994 - 1999 Interpoint. All rights reserved.

CRANE ®

interpoint
A CRANE CO. COMPANY

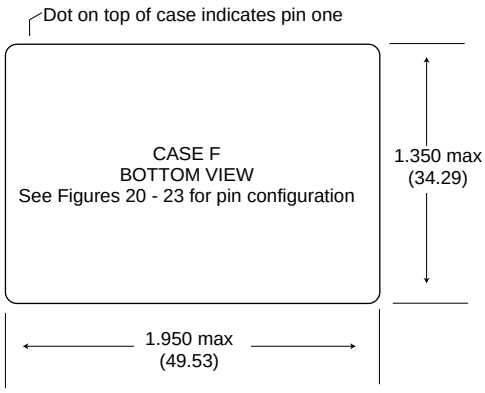

Materials

Header Case F1
Cold Rolled Steel/Nickel/Gold
Cases F2 - F4
Cold Rolled Steel/Nickel/Tin
Cover Case F1
Kovar/Nickel
Cases F2 - F4
Cold Rolled Steel/Nickel/Tin
Pins #52 alloy (all cases)
MHV Series Triple – compression glass seal
MTR Series Triple, case F1 – ceramic seal
MTR Series Triple, case F2 – compression glass seal
HUM40 – compression glass seal or ceramic seal
Case F3 – compression glass seal
Case F4 – compression glass seal or ceramic seal

CAUTION

Heat from reflow or wave soldering may damage the device. Solder pins individually with heat application not exceeding 300°C for 10 seconds per pin.

Case dimensions in inches (mm)

Tolerance ±0.005 (0.13) for three decimal places
±0.01 (0.2) for two decimal places
unless otherwise specified

FIGURE 19: CASE F MAXIMUM DIMENSIONS

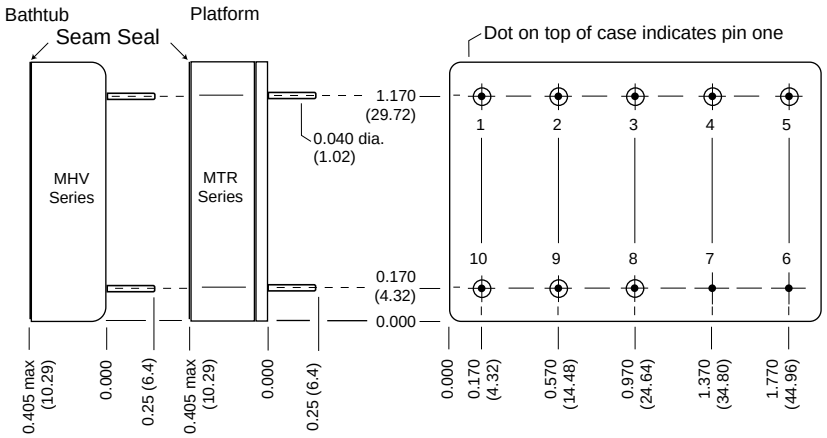

FIGURE 20: CASE F1

Note: Although every effort has been made to render the case drawings at actual size, variations in the printing process may cause some distortion. Please refer to the numerical dimensions for accuracy.

CRANE

interpoint
A CRANE CO. COMPANY

BOTTOM VIEW CASE F4
MTO and MHL Series: Screening – Standard or ES
HR153 Series: no screening options

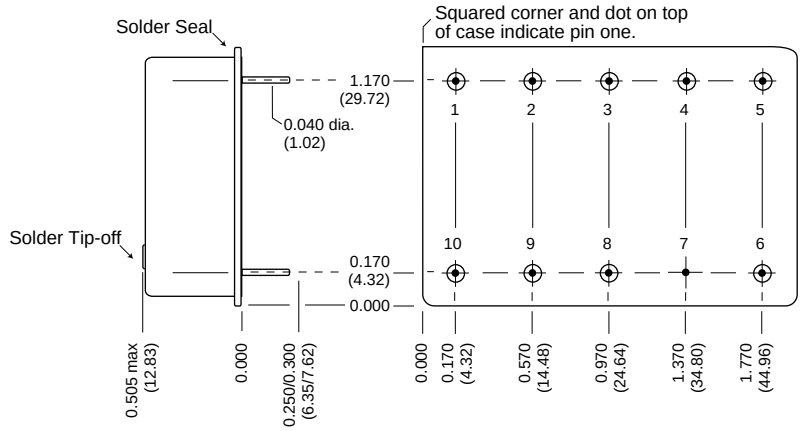

FIGURE 23: CASE F4

CRANE

interpoint
A CRANE CO. COMPANY

CASES

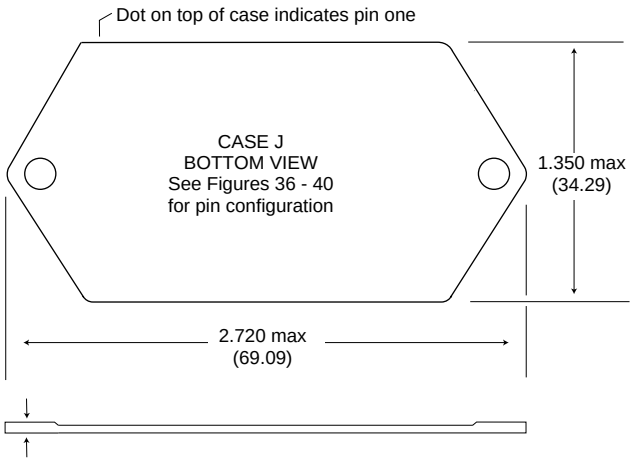

Flange Thickness:

Cases J1 and J5	0.060 (1.52)
Case J2	0.073 (1.85) max
Cases J3 and J4	0.067 +0.005/-0.007 (1.70 +0.13/-0.8)

Materials

Header Case J1
Cold Rolled Steel/Nickel/Gold
Cases J2 - J5
Cold Rolled Steel/Nickel/Tin
Cover Case J1
Kovar/Nickel
Case J2 - J5
Cold Rolled Steel/Nickel/Tin
Pins #52 alloy (all cases)
Case J1
MHV Series Triple – compression glass seal
MTR Series Triple – ceramic seal
Cases J2 - J5
compression glass seal

Case dimensions in inches (mm)

Tolerance ±0.005 (0.13) for three decimal places
±0.01 (0.2) for two decimal places
unless otherwise specified

CAUTION

Heat from reflow or wave soldering may damage the device. Solder pins individually with heat application not exceeding 300°C for 10 seconds per pin.

FIGURE 35: CASE J MAXIMUM DIMENSIONS

Note: Although every effort has been made to render the case drawings at actual size, variations in the printing process may cause some distortion. Please refer to the numerical dimensions for accuracy.

BOTTOM VIEW CASE J4

Flanged cases: Designator required in Case Option position of model number.
FMD28-461 EMI Filter (down-leaded): Screening – Standard or ES

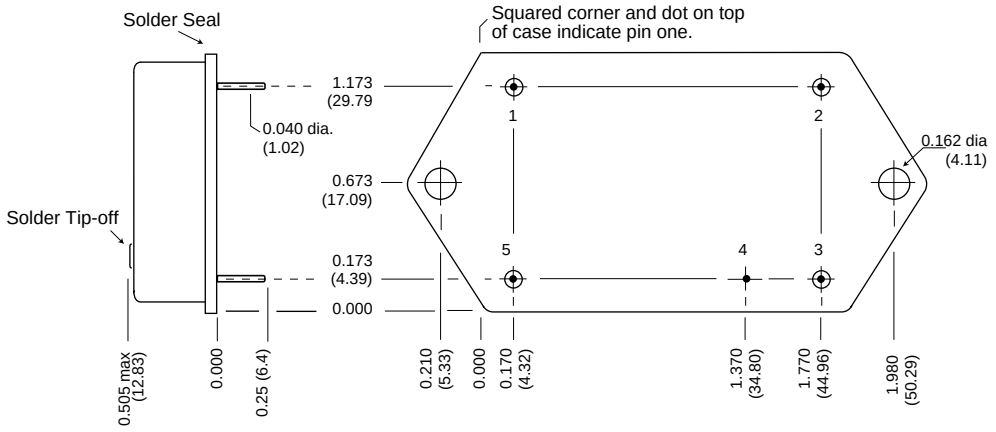

FIGURE 39: CASE J4

BOTTOM VIEW CASE J5

Flanged cases: Designator required in Case Option position of model number for MHL Series and MTO Series only.
MHL Series, MTO Series, MTW Series: Screening – Standard or ES
HR300 Series: no screening options

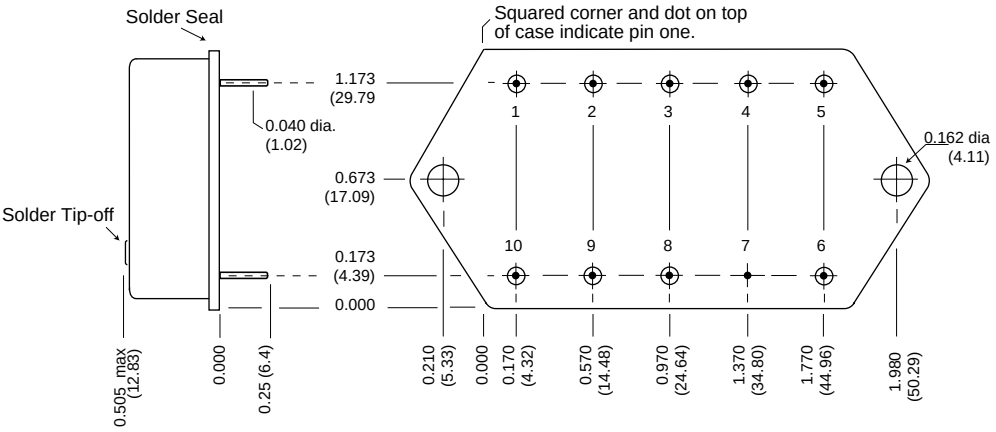

FIGURE 40: CASE J5

85°C PRODUCTS

TEST (85°C Products excluding HR products)	STANDARD	/ES
PRE-CAP INSPECTION		
Method 2017	yes	yes
TEMPERATURE CYCLE (10 times)		
Method 1010, Cond. B, -55°C to 125°C	no	yes
CONSTANT ACCELERATION		
Method 2001, 500 g	no	yes
BURN-IN		
96 hours at 70°C ambient (typical)	no	yes
FINAL ELECTRICAL TEST MIL-PRF-38534, Group A		
Subgroups 1 and 4: +25°C case	yes	yes
HERMETICITY TESTING		
Fine Leak, Method 1014, Cond. A	no	yes
Gross Leak, Method 1014, Cond. C	no	yes
Gross Leak, Dip (1×10^{-3})	yes	no
FINAL VISUAL INSPECTION		
Method 2009	yes	yes

Test methods are referenced to MIL-STD-883 as determined by MIL-PRF-38534.

Applies to the following products:

MFW Series
MTW Series
MHE/MLP Series
MHL Series
MRH Series
MTO Series
MSR Series
DCH Series
FM/FMA/FMB EMI Filters
MSF EMI Filter