MHP Single and Dual DC/DC Converters

270 VOLT INPUT – 65 WATT

FEATURES

- –55° to +100°C operation
- 160 to 400 VDC input
- Fully isolated
- Magnetic feedback
- Fixed frequency, 525 kHz typical
- Topology – Two Switch, Single Ended Forward
- 450 V / 50 ms transient protection
- Inhibit input side and output side
- Sync in and out
- Indefinite short circuit protection
- Remote sense on single models
- Up to 85% efficiency
- Parallelable: up to 5 converters



MODELS

VDC OUTPUT

SINGLE	DUAL
5	±5
12	±12
15	±15
28	

DESCRIPTION

The MHP270 Series™ DC/DC converters provide up to 65 watts of output power over the full –55°C to 100°C temperature range. MHP270 models operate from a MIL-STD-704 nominal 270 volt DC power bus – from 160 to 400 VDC continuous operation with surges to 450 volts – and provide isolated outputs at 5, 12, 15, and 28 VDC. Parallel operation for all loading conditions is supported without any requirement for external components.

MHP270 DC/DC converters are constant frequency, pulse width modulated switching power supplies which use a quasi-square wave, two-switch single-ended forward converter design. Tight load regulation is achieved through a wide-bandwidth magnetic feedback circuit.

Up to five single output MHP converters may be used in parallel to power a single load by simply connecting the share pins of all units. Units in this configuration have a 85% current sharing accuracy over all loading conditions.

MHP Series of converters feature a flexible synchronization scheme in which units may be synchronized to an external clock or to one another by using sync in and sync out pins provided on each unit. MHP converters have a nominal switching frequency of 600 kHz, but may be synchronized at any frequency from 475 to 575 kHz.

MHP converters meet a wide variety of military/aerospace performance and environmental specifications. Their continuous operation input voltage (160 to 400) meets the normal operating limits of MIL-STD-704. The unit shuts down above approximately 425 volts, but it is rated to withstand a surge of up to 450 volts for 50 msec. The units are built as fully hermetic thick film hybrids in Interpoint's MIL-STD-1772 certified facilities.

The MHP270 Series offer a complete list of standard features which include:

Undervoltage lock-out – shuts down when the input line voltage falls below approximately 120 VDC to provide smooth initialization.

Continuous short circuit protection – current limit set at approximately 125%.

Soft-start – controlled start-up at turn-on, release from inhibit, and recovery from load fault conditions.

Remote sense – to provide automatic compensation for voltage drops on output lines on single output models.

Crane Aerospace & Electronics
Electronics Group (Interpoint Brand)
PO Box 97005 • Redmond WA 98073-9705
425.882.3100 • electronics@craneae.com
www.craneae.com

CRANE AEROSPACE & ELECTRONICS

MHP Single and Dual DC/DC Converters

270 VOLT INPUT – 65 WATT

OPERATING CONDITIONS AND CHARACTERISTICS

Input Voltage Range
- 160 to 400 VDC continuous
- 450 VDC for 50 msec transient

Output Power
- 50 to 65 watts depending on model

Lead Soldering Temperature (10 sec)
- 300°C

Storage Temperature Range (Case)
- –65°C to +150°C

Case Operating Temperature (Tc)
- –55 to +100°C full power

Output Voltage Temperature Coefficient
- 100 ppm/°C typical

Current Limit
- 125% of full load typical

Isolation
- 100 megohm minimum at 500 V

Conversion Frequency
- Free run mode 525 kHz typical
  475 kHz. min., 575 kHz max
- External sync range: 475 to 575 kHz

Inhibit Pin Voltage (unit enabled)
- INH1 =12 V typ., INH2 = 5 V typ

Low Line Drop Out - Vout drops 50 mv
- Input voltage 155 VDC max

Undervoltage Lockout
- Input voltage 110 VDC min

SYNC AND INHIBIT

Sync In (525 to 675 kHz)
- Duty cycle 40% min, 60% max
- Logic low 0.8 V max
- Logic high 4.5 V min
- Referenced to input common

Sync Out - Referenced to input common

Inhibit (INH1, INH2) TTL Open Collector
- Logic low (output disabled)
  INH1 referenced to input common
  Logic low 0.8 V max
  INH2 referenced to output common
  Logic low 0.5 V max
- Logic high (output enabled)
  Open collector

MECHANICAL AND ENVIRONMENTAL

Size (maximum)
3.005 x 1.505 x 0.400 inches (76.33 x 38.23 x 10.16 mm)
See case U for dimensions.

Weight (maximum)
86 grams typical

Screening
Standard or ES. See “100°C Non-QML Products—Environmental Screening (Standard and ES)” for more information.

SINGLE OUTPUT MODELS CONNECTION DIAGRAM - SENSE

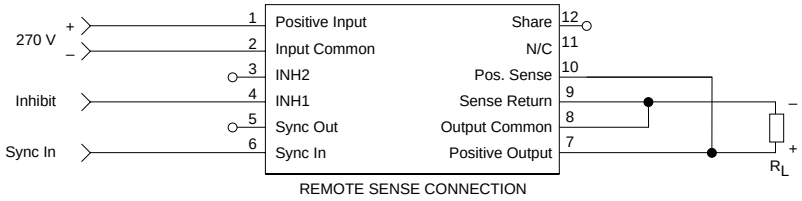

FIGURE 1: SENSE CONNECTIONS

MHP Single and Dual DC/DC Converters

270 VOLT INPUT – 65 WATT

PIN OUT

Pin	Single Output	Dual Output
1	Positive Input	Positive Input
2	Input Common	Input Common
3	Inhibit 2 (INH2)	Inhibit 2 (INH2)
4	Inhibit 1 (INH1)	Inhibit 1 (INH1)
5	Sync Out	Sync Out
6	Sync In	Sync In
7	Positive Output	Positive Output
8	Output Common	Output Common
9	Sense Return	Negative Output
10	Positive Sense	No connection
11	No connection	No connection
12	Share	Share

PINS NOT IN USE

Inhibit (INH1, INH2)	Leave unconnected
Sync Out	Leave unconnected
Sync In	Connect to input common
Share	Connect to output common
Sense Lines	Must be connected to appropriate outputs

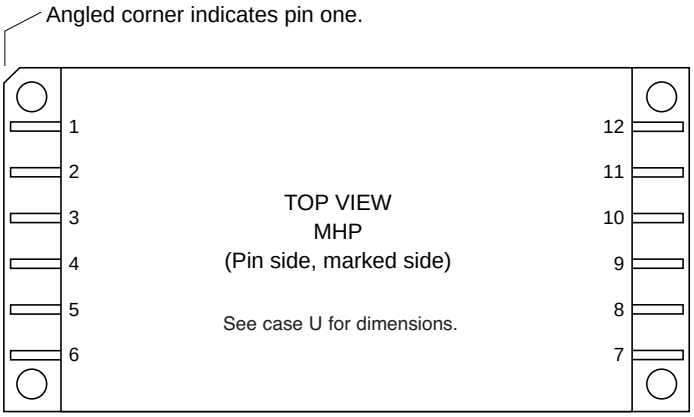

FIGURE 2: PIN OUT

MHP Single and Dual DC/DC Converters

270 VOLT INPUT – 65 WATT

SINGLE OUTPUT MODELS CONNECTION DIAGRAM - PARALLEL

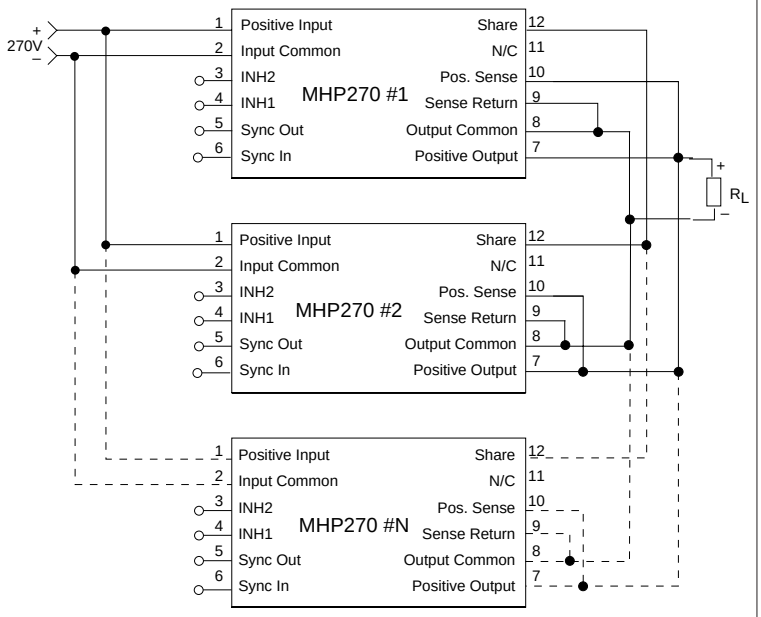

FIGURE 3: PARALLEL CONNECTIONS

MHP Single and Dual DC/DC Converters

270 VOLT INPUT – 65 WATT

MODEL NUMBERING KEY

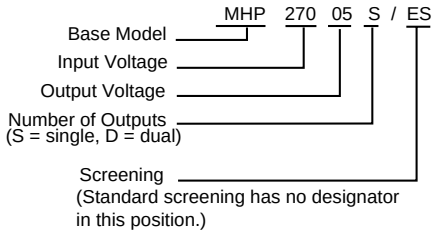

Model Selection

MHP270	_____	_____	_____
Base model	*Vout value*	*number of outputs*	*screening*

Choose one from each of the following rows

Vout value	singles: 5,12,15,28	duals: 5,12,15
Number of outputs	S (single) or D (dual)	
Screening	standard screening, leave blank	/ES (ES screening

MHP Single and Dual DC/DC Converters

270 VOLT INPUT – 65 WATT

Electrical Characteristics: 25°C Tc, 270 VDC Vin, 100% load, free run, unless otherwise specified.

SINGLE OUTPUT MODELS		MHP27005S			MHP27012S			MHP27015S			MHP27028S			
PARAMETER	**CONDITION**	**MIN**	**TYP**	**MAX**	**MIN**	**TYP**	**MAX**	**MIN**	**TYP**	**MAX**	**MIN**	**TYP**	**MAX**	**UNITS**
OUTPUT VOLTAGE		4.95	5.00	5.05	11.88	12.00	12.12	14.85	15.00	15.15	27.22	28.00	28.28	VDC
OUTPUT CURRENT	V_{IN} = 160 TO 400 VDC	0	—	10	0	—	5	0	—	4.33	0	—	2.32	A
OUTPUT POWER	V_{IN} = 160 TO 400 VDC	0	—	50	0	—	60	0	—	65	0	—	65	W
OUTPUT RIPPLE VOLTAGE	10 kHz - 2 MHz	—	—	50	—	—	50	—	—	75	—	—	280	mV p-p
LINE REGULATION	V_{IN} = 160 TO 400 VDC	—	—	50	—	—	120	—	—	150	—	—	280	mV
LOAD REGULATION	NO LOAD TO FULL	—	—	50	—	—	120	—	—	150	—	—	280	mV
INPUT VOLTAGE	CONTINUOUS	160	270	400	160	270	400	160	270	400	160	270	400	VDC
	TRANSIENT[1] 50 ms	—	—	450	—	—	450	—	—	450	—	—	450	V
INPUT CURRENT	NO LOAD	—	—	20	—	—	20	—	—	20	—	—	20	mA
	INHIBITED - INH1	—	—	8	—	—	10	—	—	7	—	—	10	mA
	INHIBITED - INH2	—	—	15	—	—	15	—	—	15	—	—	15	
INPUT RIPPLE CURRENT	10 kHz - 10 MHz	—	—	50	—	—	50	—	—	45	—	—	70	mA p-p
EFFICIENCY		76	—	—	81	—	—	80	—	—	80	—	—	%
LOAD FAULT	POWER DISSIPATION SHORT CIRCUIT	—	—	30	—	—	30	—	—	30	—	—	30	W
	V_{OUT}	—	—	1.5	—	—	1.5	—	—	1.0	—	—	1.0	VDC
STEP LOAD RESP.	50% – 100% – 50% TRANSIENT	—	—	300	—	—	700	—	—	700	—	—	1800	mV pk
	RECOVERY[2]	—	—	300	—	—	500	—	—	300	—	—	1000	μs

Notes
1. Unit will shut down above approximately 425V but will be undamaged and will restart when voltage drops into normal range.
2. Recovery time is measured from application of the transient to point at which Vout is within 1% of final value.

MHP Single and Dual DC/DC Converters

270 VOLT INPUT – 65 WATT

Electrical Characteristics: 25°C Tc, 270 VDC Vin, 100% load, free run, unless otherwise specified.

DUAL OUTPUT MODELS[1]		MHP27005D			MHP27012D			MHP27015D			
PARAMETER	**CONDITIONS**	**MIN**	**TYP**	**MAX**	**MIN**	**TYP**	**MAX**	**MIN**	**TYP**	**MAX**	**UNITS**
OUTPUT VOLTAGE	$+V_{OUT}$	4.95	5.00	5.05	11.88	12.00	12.12	14.85	15.00	15.15	VDC
	$-V_{OUT}$	4.95	5.00	5.05	11.88	12.00	12.12	14.85	15.00	15.15	
OUTPUT CURRENT[2]	V_{IN} = 160 TO 400 VDC	0	±5	8.0	0	±2.5	4.0	0	±2.16	3.46	A
OUTPUT POWER[2]	V_{IN} = 160 TO 400 VDC	0	—	50	0	—	60	0	—	65	W
OUTPUT RIPPLE VOLTAGE	10 kHz - 2 MHz ± V_{OUT}	—	50	100	—	50	125	—	50	125	mV p-p
LINE REGULATION	V_{IN} = 160 TO 400 VDC ± V_{OUT}	—	—	100	—	—	120	—	—	150	mV
LOAD REGULATION[3]	NO LOAD TO FULL ± V_{OUT}	—	—	100	—	—	120	—	—	150	mV
CROSS REGULATION[4]	EFFECT ON $-V_{OUT}$	—	—	1000	—	—	800	—	—	750	mV
INPUT VOLTAGE	CONTINUOUS	160	270	400	160	270	400	160	270	400	VDC
	TRANSIENT[5] 50 ms	0	—	450	0	—	450	0	—	450	V
INPUT CURRENT	NO LOAD	—	—	20	—	—	20	—	—	20	mA
	INHIBITED - INH1	—	—	10	—	—	10	—	—	8	mA
	INHIBITED - INH2	—	—	15	—	—	15	—	—	15	
INPUT RIPPLE CURRENT	10 kHz - 10 MHz	—	—	60	—	—	60	—	—	60	mA p-p
EFFICIENCY	BALANCED LOAD	74	—	—	81	—	—	82	—	—	%
LOAD FAULT	POWER DISSIPATION SHORT CIRCUIT	—	—	30	—	—	30	—	—	30	W
	V_{OUT}	—	—	±2.0	—	—	±1.0	—	—	±1.5	V
STEP LOAD RESPONSE ± V_{OUT}	50%–100%–50% LOAD[6] TRANSIENT	—	—	300	—	—	900	—	—	900	mV pk
	RECOVERY[7]	—	—	500	—	—	500	—	—	500	µs

Notes
1. Share operation not characterized for dual outputs.
2. Up to 80% of the total output power (current) is available from either output providing the opposite output is carrying 20% of the power (current) in use.
3. Assumes balanced loads on the outputs.
4. Effect on the negative output from 50%/50% loads to 70%/30% or 70%/30% loads.
5. Unit will shut down above approximately 425V but will be undamaged and will restart when voltage drops into normal range.
6. Second output at 50%
7. Recovery time is measured from application of the transient to point at which Vout is within 1% of final value.

MHP Single and Dual DC/DC Converter Cases

270 VOLT INPUT – 65 WATT

TOP VIEW CASE U
Flanged case, short-leaded

*Does not require designator in Case Option position of model number.

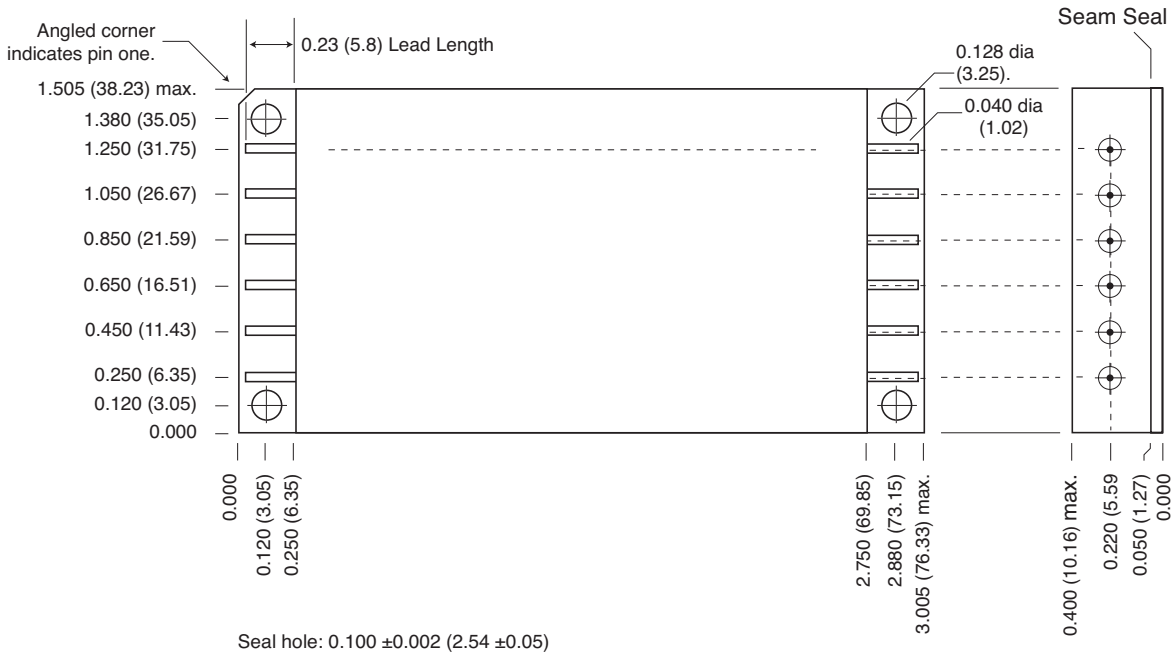

Seal hole: 0.100 ±0.002 (2.54 ±0.05)

Case dimensions in inches (mm)
Tolerance ±0.005 (0.13) for three decimal places
±0.01 (0.3) for two decimal places
unless otherwise specified

CAUTION
Heat from reflow or wave soldering may damage the device.
Solder pins individually with heat application not exceeding 300°C for 10 seconds per pin

Materials
Header Cold Rolled Steel/Nickel/Gold
Cover Kovar/Nickel
Pins #52 alloy/Gold; compression glass seal

Case U, Rev C, 20060302
Please refer to the numerical dimensions for accuracy. All information is believed to be accurate, but no responsibility is assumed for errors or omissions. Interpoint reserves the right to make changes in products or specifications without notice.
Copyright © 1999-2006 Interpoint Corp. All rights reserved.

FIGURE 4: CASE U

270 VOLT INPUT – 65 WATT

MHP270 NON-QML PRODUCTS– ENVIRONMENTAL SCREENING (STANDARD & ES)

TEST STANDARD	100°C STANDARD non-QML[1]	100°C /ES non-QML[1]
Pre-cap Inspection Method 2017, 2032	yes	yes
Temperature Cycle (10 times) Method 1010, Cond. B, -55°C to 125°C, ambient	no	yes
Constant Acceleration Method 2001, 500g	no	yes
Burn-In 96 hours, typical case temperature at 100°C case	no	yes
Final Electrical Test MIL-PRF-38534, Group A Subgroups 1 and 4: +25°C case	yes	yes
Hermeticity Test Fine Leak, Method 1014, Cond. A Gross Leak, Method 1014, Cond. C Gross Leak, Dip (1 x 10^{-3})	 no no yes	 yes yes no
Final Visual Inspection Method 2009	yes	yes

Test methods are referenced to MIL-STD-883 as determined by MIL-PRF-38534.

Notes:
1. Non-QML products do not meet all of the requirements of MIL-PRF-38534

Copyright © 1999 - 2006 Interpoint Corporation. All rights reserved. **www.craneae.com**