FEATURES

- **–55°C to +85° C operation**
- **9 to 16 or 16 to 36 VDC input**
- Fully isolated
- Opto-coupler feedback
- Fixed frequency, 250 kHz typical
- Topology – Push-Pull Forward
- 50 V for 50 ms transient protection
- Inhibit function
- Indefinite short circuit protection
- Up to 79% efficiency

DC/DC CONVERTERS 12 & 28 VOLT INPUT

MTO SERIES 15 WATT



MODELS VDC OUTPUT
TRIPLE
+5 & ±12
+5 & ±15

Size (max.): Non-flanged, case F4, 1.950 x 1.350 x 0.505 inches (49.53 x 34.29 x 12.83 mm)
Flanged, case J5, 2.720 x 1.350 x 0.505 inches (69.09 x 34.29 x 12.83 mm)
See Section B8, cases F4 and J5, for dimensions.
Weight: 53 grams typical
Screening: Standard or ES. See Section C2 for screening options, see Section A5 for ordering information.

DESCRIPTION

Interpoint's MTO Series™ of DC/DC converters delivers 15 watts of output power with three output voltages and a choice of two input voltage ranges. The MTO Series converters are packaged in hermetically sealed metal cases and operate at full load over a case temperature range of -55°C to +85°C (measured at the base plate of the converter).

CONVERTER DESIGN

The push-pull forward topology coupled with pulse-width modulation minimizes output noise and maintains good regulation. Nominal switching frequency is 250 kHz. Although an internal input filter reduces input ripple current, for applications requiring conformance to MIL-STD-461C, CE03, use the MTO in conjunction with Interpoint's FM-461 EMI filter.

Operating at maximum ratings may require removing self-generated heat. To increase heat dissipation, heat conducting material can be used in contact with the converter's base plate. Interpoint's Thermal Mounting Pad (TMP), model TMP-002, is designed for use with the MTO converter.

FEATURES

An inhibit terminal, pin 8, provides shut-down and start-up control. Applying a logic low (<0.8 V) will disable the output of the converter reducing input current to 8 mA, typical. Leaving the terminal unconnected or connecting it to Vin will enable the converter. The inhibit pin has an open circuit voltage of approximately 10 volts.

Soft-start provides a controlled 20 milliseconds turn-on to minimize inrush current and reduce overshoot at initial start-up or when inhibit is released.

Internal current limiting circuitry protects all three outputs against short circuits. When output power exceeds approximately 125% of maximum output power, the output currents are limited. In addition, separate current limiting circuitry protects each output individually.

PACKAGING

MTO converters are packaged in hermetically sealed metal cases. The cases are constructed of cold-rolled steel with a fused tin finish. MTO converters can be purchased in a flanged or non-flanged case. The flanged option provides increased heat dissipation and also provides greater stability when mechanically secured.

MTO SERIES
15 WATT

DC/DC CONVERTERS

ABSOLUTE MAXIMUM RATINGS

Output Power
- 15 watts

Lead Soldering Temperature (10 sec per lead)
- 300°C

Storage Temperature Range (Case)
- –65°C to +125°C

INHIBIT

Inhibit TTL Open Collector
- Logic low (output disabled)
  V = <0.8 V
  Inhibit pin current < 2.0 mA
- Referenced to input common
- Logic high (output enabled)
  Unconnected or connected to Vin

TYPICAL CHARACTERISTICS

Output Voltage Temperature Coefficient
- 150 ppm/°C typical

Input to Output Capacitance
- 80 pF typical

Current Limit
- 125% of full load typical

Isolation
- 100 megohm minimum at 500 V

Conversion Frequency
- 250 kHz typical

Inhibit Pin Voltage (unit enabled)
- 10 V typical

RECOMMENDED OPERATING CONDITIONS

Input Voltage Range
- MTO12XXT 9 to 16 VDC continuous
- MTO28XXT 16 to 36 VDC continuous
- MTO12XXT 25 V for 50 msec transient
- MTO28XXT 50 V for 50 msec transient

Case Operating Temperature (Tc)
- –55°C to +85°C full power
- –55°C to +115°C absolute

Derating Output Power/Current
- Linearly from 100% at 85°C to 0% at 115° C

Electrical Characteristics: 25°C Tc, 28 VDC Vin (12 VDC for 12V models), 100% load, unless otherwise specified.

		MTO1212T			MTO1215T			MTO2812T			MTO2815T			
PARAMETER	**CONDITION**	**MIN**	**TYP**	**MAX**	**MIN**	**TYP**	**MAX**	**MIN**	**TYP**	**MAX**	**MIN**	**TYP**	**MAX**	**UNITS**
OUTPUT VOLTAGE	MAIN	4.95	5.0	5.05	4.95	5.0	5.05	4.95	5.0	5.05	4.95	5.0	5.05	VDC
	+ AUXILIARY	11.88	12.0	12.12	14.85	15.0	15.15	11.88	12.0	12.12	14.85	15.0	15.15	
	– AUXILIARY	11.88	12.0	12.12	14.85	15.0	15.15	11.88	12.0	12.12	14.85	15.0	15.15	
OUTPUT CURRENT	MAIN[1]	100	—	2000	100	—	2000	100	—	2000	100	—	2000	mA
	AUXILIARY	—	—	±208	—	—	±167	—	—	±208	—	—	±167	
OUTPUT POWER	MAIN	—	—	10.0	—	—	10.0	—	—	10.0	—	—	10.0	W
	+ AUXILIARY	—	—	2.5	—	—	2.5	—	—	2.5	—	—	2.5	
	– AUXILIARY	—	—	2.5	—	—	2.5	—	—	2.5	—	—	2.5	
	TOTAL	—	—	15	—	—	15	—	—	15	—	—	15	
OUTPUT RIPPLE	MAIN	—	—	80	—	—	80	—	—	80	—	—	80	mV p-p
VOLTAGE, BW = 1 MHZ	± AUXILIARY	—	—	30	—	—	30	—	—	30	—	—	30	
LINE REGULATION	MAIN	—	5	10	—	5	10	—	5	10	—	5	10	mV
V_{in} = MIN. TO MAX.	±AUXILIARY	—	30	48	—	30	60	—	30	48	—	30	60	
LOAD REGULATION	MAIN	—	10	20	—	10	20	—	10	20	—	10	20	mV
NO LOAD TO FULL	± AUXILIARY	—	30	48	—	30	60	—	30	48	—	30	60	
INPUT VOLTAGE	CONTINUOUS	9	12	16	9	12	16	16	28	36	16	28	36	VDC
	TRANSIENT 50 ms	—	—	25	—	—	25	—	—	50	—	—	50	V
INPUT CURRENT	NO LOAD	—	—	60	—	—	60	—	—	30	—	—	30	mA
	FULL LOAD	—	—	1670	—	—	1670	—	—	700	—	—	700	
	INHIBITED	—	8	10	—	8	10	—	8	10	—	8	10	
INPUT RIPPLE CURRENT		—	50	100	—	50	100	—	20	50	—	20	50	mA p-p
EFFICIENCY		76	79	—	76	79	—	76	79	—	76	79	—	%

Note
1. Minimum load required for full output capability on auxiliary outputs. Minimum current can be reduced when dual outputs are used at reduced loads.

CRANE
interpoint
A CRANE CO. COMPANY

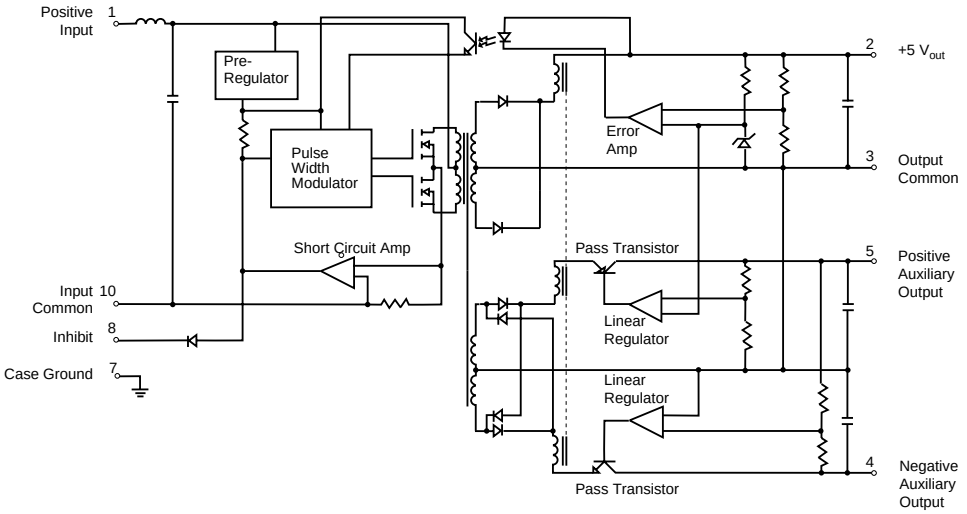

FIGURE 1: SIMPLIFIED SCHEMATIC

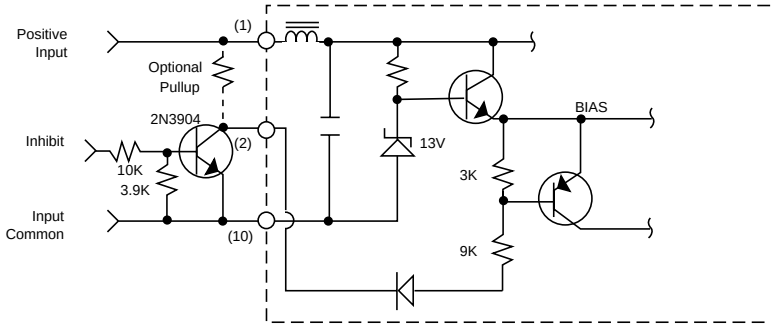

FIGURE 2: INHIBIT INTERFACE EXAMPLE

DC/DC CONVERTERS

PIN OUT

Pin	Designation
1	Positive Input
2	+5 VDC Output
3	Output Common
4	Negative Aux. Output
5	Positive Aux. Output
6	No Connection
7	Case Ground
8	Inhibit
9	No Connection
10	Input Common

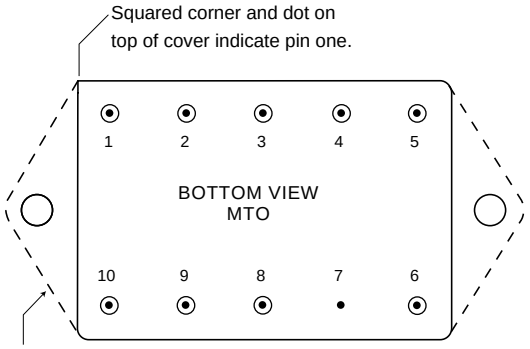

Dotted line outlines flanged package option.

See Section B8, Cases F4 and J5, for dimensions

FIGURE 3: PIN OUT

MODEL NUMBERING KEY

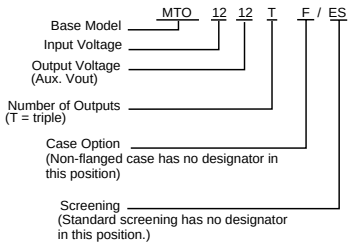

Typical Performance Curve: 25°C Tc

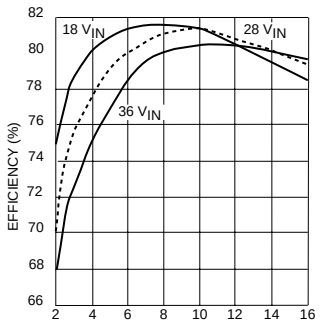

Output Power (Watts)
Representative of all models
MTO2815T Efficiency

FIGURE 4

24223-001-DTS Rev A DQ# 1021
All technical information is believed to be accurate, but no responsibility is assumed for errors or omissions. Interpoint reserves the right to make changes in products or specifications without notice. MTO Series is a trademark of Interpoint. Copyright © 1990 - 1999 Interpoint. All rights reserved.

CRANE ®

interpoint
A CRANE CO. COMPANY

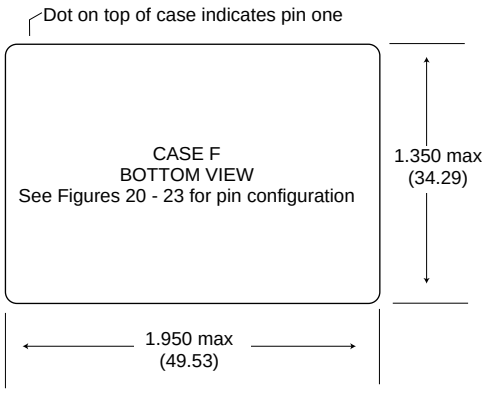

Materials

Header Case F1
Cold Rolled Steel/Nickel/Gold
Cases F2 - F4
Cold Rolled Steel/Nickel/Tin
Cover Case F1
Kovar/Nickel
Cases F2 - F4
Cold Rolled Steel/Nickel/Tin
Pins #52 alloy (all cases)
MHV Series Triple – compression glass seal
MTR Series Triple, case F1 – ceramic seal
MTR Series Triple, case F2 – compression glass seal
HUM40 – compression glass seal or ceramic seal
Case F3 – compression glass seal
Case F4 – compression glass seal or ceramic seal

CAUTION

Heat from reflow or wave soldering may damage the device. Solder pins individually with heat application not exceeding 300°C for 10 seconds per pin.

Case dimensions in inches (mm)

Tolerance ±0.005 (0.13) for three decimal places
±0.01 (0.2) for two decimal places
unless otherwise specified

FIGURE 19: CASE F MAXIMUM DIMENSIONS

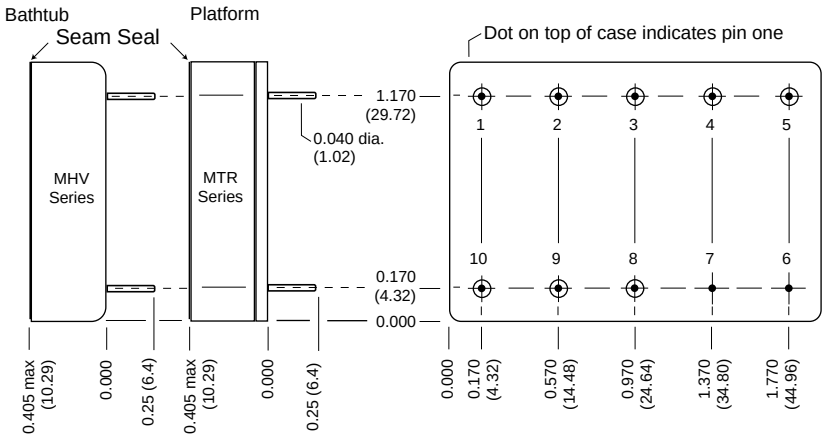

FIGURE 20: CASE F1

Note: Although every effort has been made to render the case drawings at actual size, variations in the printing process may cause some distortion. Please refer to the numerical dimensions for accuracy.

CRANE

interpoint
A CRANE CO. COMPANY

BOTTOM VIEW CASE F4
MTO and MHL Series: Screening – Standard or ES
HR153 Series: no screening options

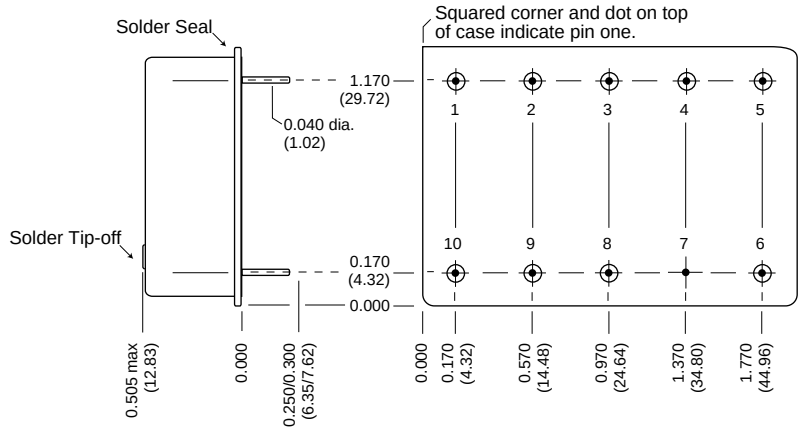

FIGURE 23: CASE F4

CRANE

interpoint
A CRANE CO. COMPANY

CASES

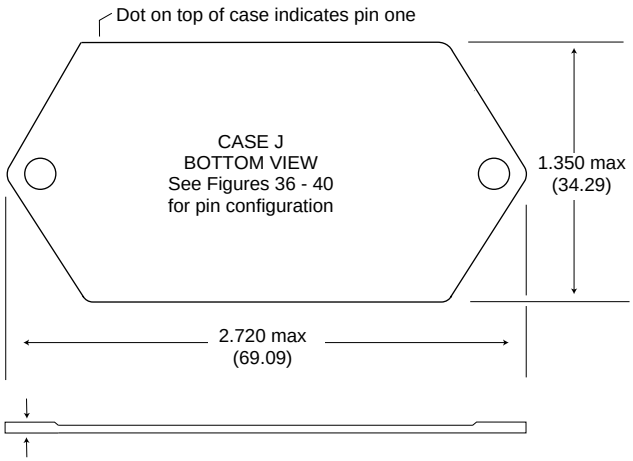

Flange Thickness:

Cases J1 and J5	0.060 (1.52)
Case J2	0.073 (1.85) max
Cases J3 and J4	0.067 +0.005/-0.007 (1.70 +0.13/-0.8)

Materials

Header Case J1
Cold Rolled Steel/Nickel/Gold
Cases J2 - J5
Cold Rolled Steel/Nickel/Tin
Cover Case J1
Kovar/Nickel
Case J2 - J5
Cold Rolled Steel/Nickel/Tin
Pins #52 alloy (all cases)
Case J1
MHV Series Triple – compression glass seal
MTR Series Triple – ceramic seal
Cases J2 - J5
compression glass seal

Case dimensions in inches (mm)

Tolerance ±0.005 (0.13) for three decimal places
±0.01 (0.2) for two decimal places
unless otherwise specified

CAUTION

Heat from reflow or wave soldering may damage the device. Solder pins individually with heat application not exceeding 300°C for 10 seconds per pin.

FIGURE 35: CASE J MAXIMUM DIMENSIONS

Note: Although every effort has been made to render the case drawings at actual size, variations in the printing process may cause some distortion. Please refer to the numerical dimensions for accuracy.

BOTTOM VIEW CASE J4

Flanged cases: Designator required in Case Option position of model number.
FMD28-461 EMI Filter (down-leaded): Screening – Standard or ES

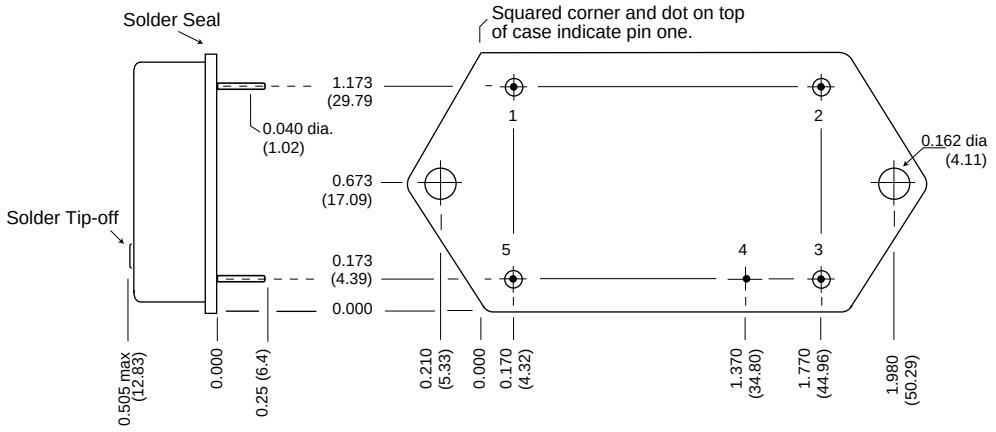

FIGURE 39: CASE J4

BOTTOM VIEW CASE J5

Flanged cases: Designator required in Case Option position of model number for MHL Series and MTO Series only.
MHL Series, MTO Series, MTW Series: Screening – Standard or ES
HR300 Series: no screening options

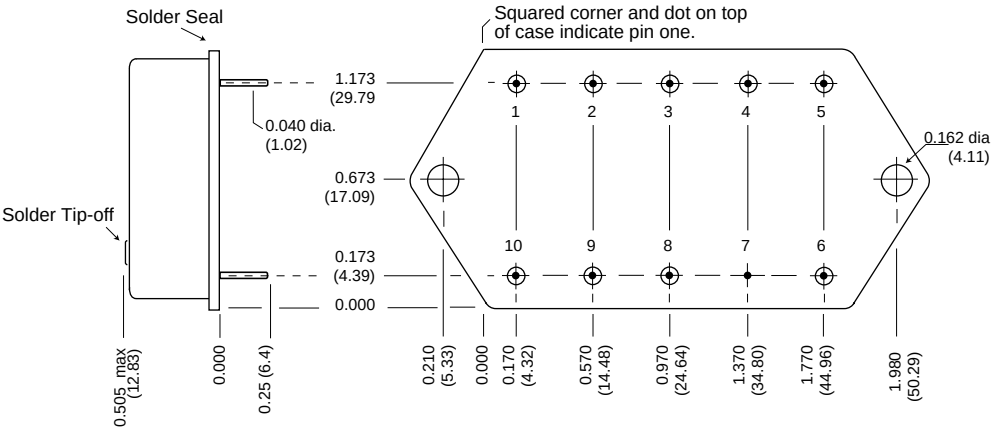

FIGURE 40: CASE J5

85°C PRODUCTS

TEST (85°C Products excluding HR products)	STANDARD	/ES
PRE-CAP INSPECTION		
Method 2017	yes	yes
TEMPERATURE CYCLE (10 times)		
Method 1010, Cond. B, -55°C to 125°C	no	yes
CONSTANT ACCELERATION		
Method 2001, 500 g	no	yes
BURN-IN		
96 hours at 70°C ambient (typical)	no	yes
FINAL ELECTRICAL TEST MIL-PRF-38534, Group A		
Subgroups 1 and 4: +25°C case	yes	yes
HERMETICITY TESTING		
Fine Leak, Method 1014, Cond. A	no	yes
Gross Leak, Method 1014, Cond. C	no	yes
Gross Leak, Dip (1×10^{-3})	yes	no
FINAL VISUAL INSPECTION		
Method 2009	yes	yes

Test methods are referenced to MIL-STD-883 as determined by MIL-PRF-38534.

Applies to the following products:

MFW Series
MTW Series
MHE/MLP Series
MHL Series
MRH Series
MTO Series
MSR Series
DCH Series
FM/FMA/FMB EMI Filters
MSF EMI Filter