FEATURES

- **–40° to +85°C operation**
- **18 to 36 VDC input**
  (19 to 36 VDC input HR301-2805)
- Fully Isolated
- Optocoupler feedback
- Fixed frequency, 240 to 300 kHz typical
- Topology – Push-Pull Forward
- 50 V for up to 50 ms transient protection
- Inhibit function
- Indefinite short circuit protection
- Remote sense on HR301-2805 model
- Up to 86% efficiency

DC/DC CONVERTERS
28 VOLT INPUT

HR300 SERIES
30 WATT

MODELS

VDC OUTPUT

SINGLE	DUAL
5	±12
12	±15
15	



Size (max.): 2.720 x 1.350 x 0.505 inches (69.09 x 34.29 x 12.83 mm)
See Section B8, case J5, for dimensions.
Weight: 60 grams max.
Screening: Standard only. See Section C2 for screening description.

DESCRIPTION

HR300 Series™ DC/DC converters combine the small size and high reliability of hybrid-based components, the high efficiency of switching regulators, and the isolation, regulation, and low noise characteristics of linear regulators.

SMALL SIZE AND RELIABILITY

HR300 DC/DC converters use thick-film hybrid manufacturing techniques for smaller size, lighter weight and higher reliability than converters produced with other circuit techniques. With a footprint of less than 3.7 square inches and a 0.5 inch height, the HR300 converters reach power densities up to 22 watts per cubic inch.

The HR300 parts use the same manufacturing procedures and quality controls that Interpoint applies to converters built for aerospace and military applications. The converters are hermetically sealed in metal packages that are guaranteed a maximum leak rate of less than 10^{-3} atm-cc/sec.

HIGH PERFORMANCE

HR300 converters use a constant frequency pulse-width modulated switching regulator design operating in the forward mode with a clock switching frequency of 240 to 300 kHz. Isolation is achieved through the use of a transformer in the forward power circuit and an optocoupler in the feedback control loop. The full load output power of 30 watts is available over the entire 18 to 36 VDC input range (19 to 36 HR301-2805). On dual output models, up to 90% of full power is available from either output up to a combined total of 30 watts.

The HR300's high efficiency is maintained over the entire input voltage range and from approximately 25% of full load to full load (see typical efficiency curves).

Short circuit protection is provided through foldback current limiting. When the output current reaches approximately 125% of the full rated load, the output voltage begins to reduce to protect the converter. The converter can sustain a true short circuit condition indefinitely. The HR300's flanged case facilitates removal of heat and provides for mechanically secure mounting. If full power operation or indefinite short circuit protection is a system requirement, the HR300 converter should be mounted with an efficient heat sink in contact with the mounting flange.

Internal filters in all HR300 converters provide low noise on both the input and outputs. On HR301 models, two-section L-C filters limit output ripple voltage and reflected input ripple current. On HR302 models, single-section L-C filters perform the same function.

For maximum output regulation, the HR301-2805 is provided with external output voltage remote sense pins. Connecting the remote sense pins to the load provides a four-terminal voltage mode which eliminates the adverse effects of line resistance voltage drops. Remote sense pins may be left unconnected, but see cautions in this data sheet. For normal operation, remote sense pins should be connected to the respective output pins.

INHIBIT FUNCTION

An inhibit is provided to allow a logic input to shut down the converter. An open circuit on the inhibit pin (pin 2 or 8) allows normal operation. A connection between the inhibit pin and the input common (pin 10) disables the internal oscillator, shutting down the output. The inhibit pin has an open circuit voltage of 11 to 16 V on single output models, 8 to 12 V on HR302-2812 and 10 to 14 V on HR302-2815. In the inhibit mode, approximately 1 mA must be sunk from the inhibit pin. An active low open collector is required to activate the inhibit function.

HR300 SERIES
30 WATT

DC/DC CONVERTERS

ABSOLUTE MAXIMUM RATINGS

Input Voltage
- 18 to 36 VDC (19 to 36 VDC HR301-2805)

Output Power
- 30 watts

Lead Soldering Temperature (10 sec per lead)
- 300°C

Storage Temperature Range (Case)
- –55°C to +125°C

INHIBIT

Inhibit TTL Open Collector
- Logic low (output disabled)
  Inhibit pin current 1 mA typical
- Referenced to input common
- Logic high (output enabled)
  Open collector

RECOMMENDED OPERATING CONDITIONS

Input Voltage Range
- 18 to 36 VDC continuous
  19 to 36 VDC HR301-2805
- 50 V for 50 msec transient

Case Operating Temperature (Tc)
- –40°C to +85°C full power

TYPICAL CHARACTERISTICS

Output Voltage Temperature Coefficient
- 100 ppm/°C typical

Input to Output Capacitance
- 80 pF typical single output models
- 70 pF typical HR302-2812
- 60 pF typical HR302-2815

Current Limit
- 125% of full load, typical

Isolation
- 100 megohm minimum at 500 V

Conversion Frequency
- 240 to 300 kHz

Inhibit Pin Voltage (unit enabled)
- 11 to 16 V single output models
- 8 to 12 V HR302-2812
- 10 to 14 V HR302-2815

Electrical Characteristics: 25°C Tc, 28 VDC Vin, 100% load, unless otherwise specified.

SINGLE OUTPUT MODELS		HR301-2805			HR301-2812			HR301-2815			
PARAMETER	**CONDITIONS**	**MIN**	**TYP**	**MAX**	**MIN**	**TYP**	**MAX**	**MIN**	**TYP**	**MAX**	**UNITS**
OUTPUT VOLTAGE		4.95	5.0	5.05	11.88	12	12.12	14.85	15	15.15	VDC
OUTPUT CURRENT		—	—	6.0	—	—	2.5	—	—	2.0	A
OUTPUT POWER	–40°C TO +85°C	—	—	30.0	—	—	30.0	—	—	30.0	W
OUTPUT RIPPLE	BW ≤ 2 MHz	—	30	60	—	30	70	—	30	75	mV p-p
LINE REGULATION[1]	MIN. TO MAX. V_{IN}	—	7	25	—	10	40	—	10	40	mV
LOAD REGULATION[2]	NO LOAD TO FULL	—	5	25	—	10	40	—	10	40	mV
INPUT VOLTAGE	NO LOAD TO FULL	19	28	36	18	28	36	18	28	36	VDC
–40°C TO +85°C	TRANSIENT 50 ms	—	—	50	—	—	50	—	—	50	
INPUT CURRENT	NO LOAD	—	15	20	—	20	35	—	20	35	
	FULL LOAD	—	—	1370	—	—	1400	—	—	1400	mA
	INHIBITED	—	—	15	—	—	22	—	—	22	
INPUT RIPPLE CURRENT	BW ≤ 2 MHz	—	5	15	—	10	25	—	10	25	mA p-p
EFFICIENCY		79	82	—	80	84	—	82	86	—	%
START-UP	DELAY[2]	—	15	—	—	30	—	—	40	—	ms
	OVERSHOOT	—	500	—	—	1200	—	—	1500	—	mV

Notes
1. For HR301-2805, with the remote sense pins connected to the load and no resistance between the output pins and load.
2. A low output impedance power source is required on the input to realize this start-up time. If less than full surge current is available, start-up time will be longer

CAUTION
Permanent damage to the HR301-2805 will result if pin 6 is shorted to ground. Damage may also result if pin 4 or pin 5 is disconnected from the load during operation with the remote sense leads connected to the load. If remote sense pins are not connected to the load, the output voltage of the HR301-2805 will rise to approximately 6.2 VDC measured across pins 4 and 5.

CRANE
interpoint
A CRANE CO. COMPANY

Electrical Characteristics: 25°C Tc, 28 VDC Vin, 100% load, unless otherwise specified.

TRIPLE OUTPUT MODELS		HR302-2812			HR302-2815			
PARAMETER	**CONDITION**	**MIN**	**TYP**	**MAX**	**MIN**	**TYP**	**MAX**	**UNITS**
OUTPUT VOLTAGE	$+V_{OUT}$	11.88	12.0	12.12	14.85	15.0	15.15	VDC
	$-V_{OUT}$	11.88	12.0	12.12	14.85	15.0	15.15	
OUTPUT CURRENT[1]		—	—	2.5	—	—	2.0	A
OUTPUT POWER[1]	–40°C to +85°C	—	—	30.0	—	—	30.0	W
OUTPUT RIPPLE VOLTAGE	BW ≤ 2 MHz	—	50	90	—	50	90	mV p-p
LINE REGULATION	V_{IN} = 18 TO 36	—	10	30	—	10	40	mV
LOAD REGULATION	NO LOAD TO FULL	—	20	60	—	20	60	mV
CROSS REGULATION[2]	$+V_{OUT}$	—	2.5	3.5	—	2.2	3.2	%
	$-V_{OUT}$	—	2.5	3.5	—	2.2	3.2	
INPUT VOLTAGE	CONTINUOUS	18	28	36	18	28	36	VDC
–40°C to +85°C	TRANSIENT 50 ms	—	—	50	—	—	50	
INPUT CURRENT	NO LOAD	—	35	50	—	45	60	mA
	FULL LOAD	—	—	1350	—	—	1400	
	INHIBITED	—	—	24	—	—	24	
INPUT RIPPLE CURRENT	BW ≤ 2 MHz	—	15	60	—	15	60	mA p-p
EFFICIENCY		80	84	—	81	85	—	%
START-UP	DELAY[3]	—	60	—	—	60	—	ms
	OVERSHOOT	—	1500	—	—	1500	—	mV

Notes
1. Up to 90% of full power is available from either output providing the total power does not exceed 30 watts.
2. The effect on the output voltage of either output (held at 3 watts) when the other output is varied from 3 to 27 watts.
3. A low output impedance power source is required on the input to realize this start-up time. If less than full surge current is available, start-up time will be longer

PIN OUT

Pin	HR301-2805	Single Output	Dual Output
1	Positive Input	Positive Input	Positive Input
2	Inhibit	Inhibit	No connection
3	Sense Return	No connection	Positive Output
4	Output Common	Output Common	Output Common
5	Positive Output	Positive Output	Negative Output
6	Positive Sense	No connection	No connection
7	Case Ground	Case Ground	Case Ground
8	No connection	No connection	Inhibit
9	No connection	No connection	Input Common
10	Input Common	Input Common	Input Common

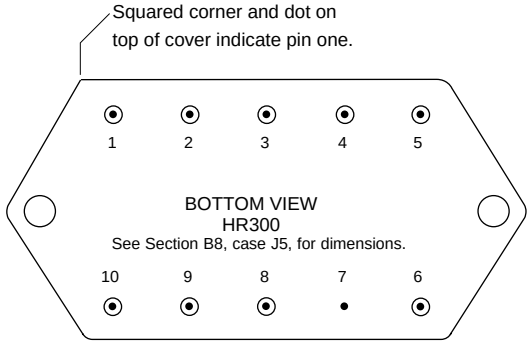

FIGURE 1: PIN OUT

MODEL NUMBERING KEY

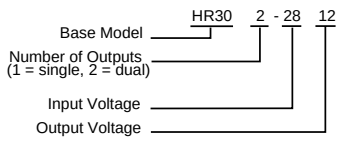

DC/DC CONVERTERS

Typical Performance Curves: 25°C Tc

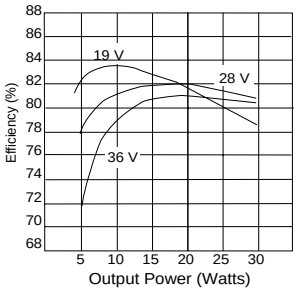

HR301-2805 Efficiency

FIGURE 2

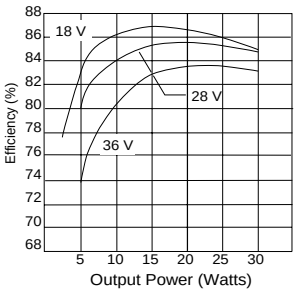

HR301-2812 Efficiency

FIGURE 3

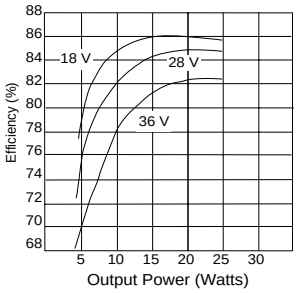

HR302-2812 Efficiency

FIGURE 4

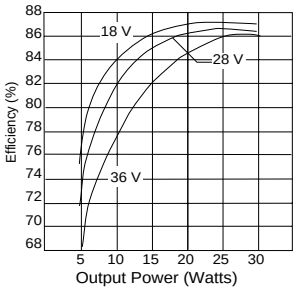

HR302-2815 Efficiency

FIGURE 5

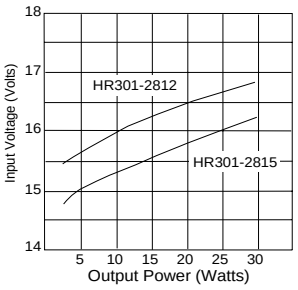

HR301-2812 and HR301-2815
Low Line Dropout

FIGURE 6

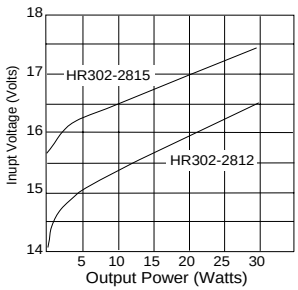

HR302-2812 and HR302-2815
Low Line Dropout

FIGURE 7

24421-009-DTS Rev A DQ# 2009

All technical information is believed to be accurate, but no responsibility is assumed for errors or omissions. Interpoint reserves the right to make changes in products or specifications without notice. HR300 Series is a trademark of Interpoint. Copyright © 1991 - 1999 Interpoint. All rights reserved.

CRANE

interpoint
A CRANE CO. COMPANY

CASES

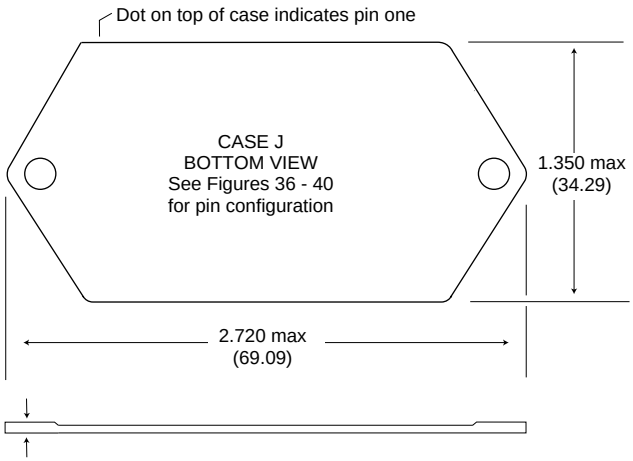

Flange Thickness:

Cases J1 and J5	0.060 (1.52)
Case J2	0.073 (1.85) max
Cases J3 and J4	0.067 +0.005/-0.007 (1.70 +0.13/-0.8)

Materials

Header Case J1
Cold Rolled Steel/Nickel/Gold
Cases J2 - J5
Cold Rolled Steel/Nickel/Tin
Cover Case J1
Kovar/Nickel
Case J2 - J5
Cold Rolled Steel/Nickel/Tin
Pins #52 alloy (all cases)
Case J1
MHV Series Triple – compression glass seal
MTR Series Triple – ceramic seal
Cases J2 - J5
compression glass seal

Case dimensions in inches (mm)

Tolerance ±0.005 (0.13) for three decimal places
±0.01 (0.2) for two decimal places
unless otherwise specified

CAUTION

Heat from reflow or wave soldering may damage the device. Solder pins individually with heat application not exceeding 300°C for 10 seconds per pin.

FIGURE 35: CASE J MAXIMUM DIMENSIONS

Note: Although every effort has been made to render the case drawings at actual size, variations in the printing process may cause some distortion. Please refer to the numerical dimensions for accuracy.

BOTTOM VIEW CASE J4

Flanged cases: Designator required in Case Option position of model number.
FMD28-461 EMI Filter (down-leaded): Screening – Standard or ES

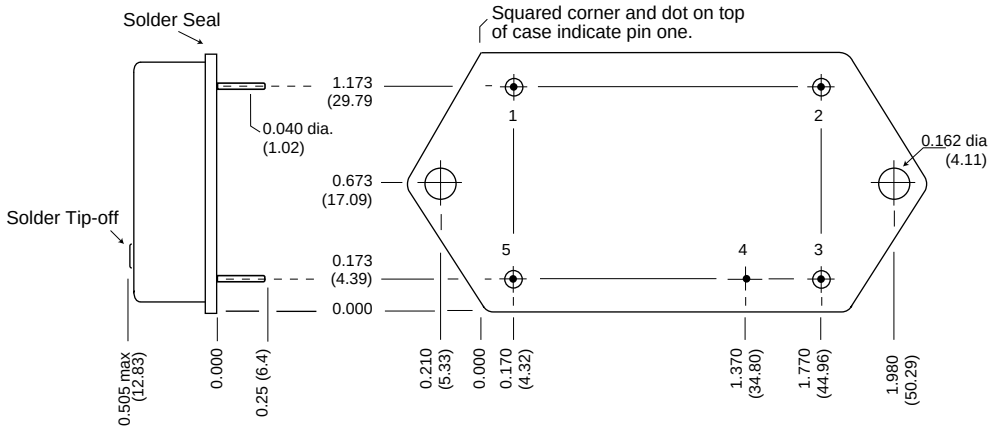

FIGURE 39: CASE J4

BOTTOM VIEW CASE J5

Flanged cases: Designator required in Case Option position of model number for MHL Series and MTO Series only.
MHL Series, MTO Series, MTW Series: Screening – Standard or ES
HR300 Series: no screening options

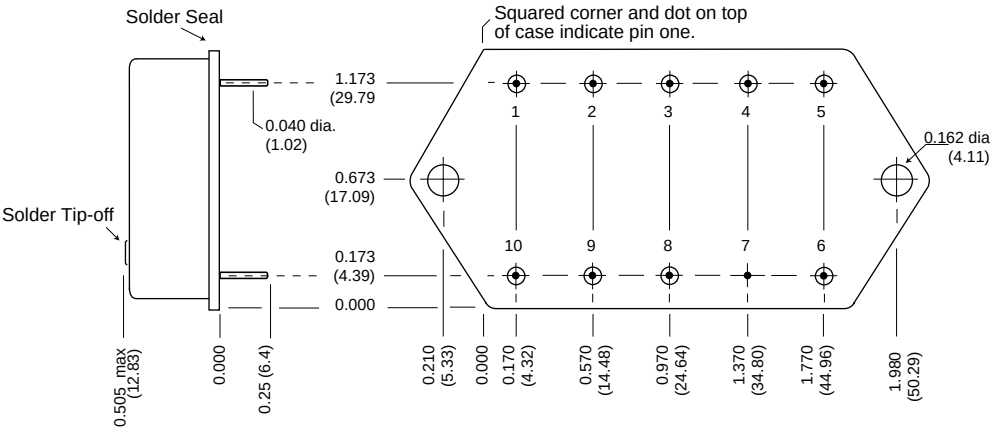

FIGURE 40: CASE J5

HR PRODUCTS

TEST (HR products)	STANDARD
PRE-CAP INSPECTION Method 2017	yes
FINAL ELECTRICAL TEST MIL-PRF-38534, Group A Subgroups 1 and 4: +25°C case	yes
HERMETICITY TESTING Gross Leak, Dip (1×10^{-3})	yes
FINAL VISUAL INSPECTION Method 2009	yes

Test methods are referenced to MIL-STD-883 as determined by MIL-PRF-38534.

Applies to the following products:

HR700 Series
HR300 Series
HR150 Series
HR120 Series
HR40 Series