Datasheet

SATA Slim 2MR series

- Compliant with MIL-STD-810-F/G
- Data Security (QEraser/ SEraser/ Destroy/ Write Protect)
- Conformal coating (Optional)
- Excellent data transfer rate



Introduction

Innodisk's SATA Slim 2MR is compliant with the JEDEC MO-297 standards and SATA-IO mini SATA standards, which supports SATA II standard (3.0Gb/s). It comes with several data security functions, including SEraser, QEraser, Destroy, and Write Protect. Also, SATA Slim 2MR is compliant with MIL-STD-810 standards and thus it delivers resistance to shock, vibration and other critical in harsh environment. The SATA Slim 2MR is an MLC-based flash device and is available in capacities from 32GB up to 256GB.

SATA Slim 2MR series

Drawing

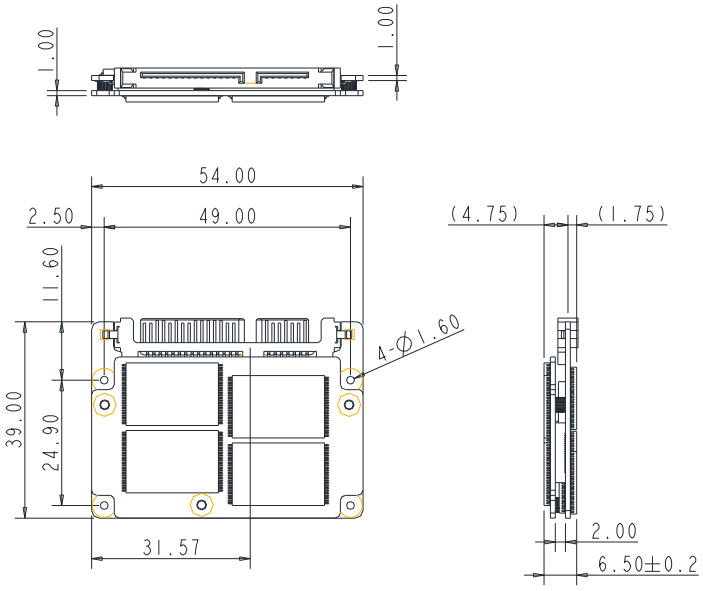

Contact us for more information about the SATA Slim 2MR

Innodisk is a service-driven provider of industrial embedded flash and DRAM storage products and technologies, with a focus on the industrial/embedded, aerospace and defense, and cloud computing industries.

Specifications

Interface	SATA II
Flash Type	MLC
Flash P/E cycle limit	3,000
Capacity	32GB~256GB
Max. Channels	8
Sequential R/W (MB/sec, max.)	190 / 120
Max. Power Consumption	1.9 W (5V x 380 mA)
Thermal Sensor	√
External DRAM Buffer	√
H/W Write Protect	–
ATA Security	√
S.M.A.R.T.	√
Dimension (WxLxH)	54.0 X 39.0 X 6.5 mm
Environment	Vibration: 20G @7~2000Hz Shock: 1500G @ 0.5ms Storage Temperature: -55°C ~ +95°C MTBF: 3 million hours

Ordering Information

Operation Temp.	32GB	64GB	128GB	256GB
Standard Grade (0°C ~ +70°C)	DRSLM-32GJ21AC1EN	DRSLM-64GJ21AC1EN	DRSLM-A28GJ21AC1EN	DRSLM-B56J21AC1EN
Industrial Grade (-40°C ~ +85°C)	DRSLM-32GJ21AE1EN	DRSLM-64GJ21AE1EN	DRSLM-A28GJ21AE1EN	DRSLM-B56J21AE1EN

Headquarters (Taiwan)
9F., No.100, Sec. 1, Xintai 5th Rd., Xizhi Dist., New Taipei City, Taiwan (R.O.C.)
Tel: +886-2-26963000
Email: sales@innodisk.com

Branch Offices:
USA
usasales@innodisk.com
+1-510-770-9421
Europe
eusales@innodisk.com
+31-040-282-2382
Japan
jpsales@innodisk.com
+81-3-6661-9846
China
sales_cn@innodisk.com
+86-755-21673689
www.innodisk.com

© 2012 Innodisk Corporation. All right reserved. Specifications are subject to change without prior notice.

20130412