SATA SLIM J200



FEATURES

- High Performance
- S.M.A.R.T. & i-S.M.A.R.T. Supported
- Built-in hardware BCH ECC
- Bad block management
- Excellent data transfer performance

R: 135MB W: 130MB | S.M.A.R.T | Budget friendly

Wear Leveling | MDMA UDMA | MO-297

Specifications

Connector Type	Standard 7+15 Pin SATA Connector
Flash Type	SLC (single level cell)
Density	8GB, 16GB, 32GB, 64GB
Interface	SATA II, SATA I, PIO 0~4, MDMA 0~2, UDMA 0~6
Sustained R/W Performance	Read：220MB/sec (max.) Write：180 MB/sec (max.)

Environmental

DC Input	+5V DC ± 5%
Power consumption (Max.)	Read: 300mA Write: 350 mA Idle: 150 mA
Operating Temperature	0^0C~+70^0C (Standard Grade) -40^0C~+85^0C (Industry Grade)
Storage Temperature	-55^0C~+95^0C
Humidity	Relative Humidity: 10-95%, non-condensing
Endurance	100,000 program/erase cycles
MTBF	> 3,000,000 hours
Certification	CE, FCC, RoHS
Warranty	5 years

Mechanicals

Dimension (W x L x H)	39.0mm x 54.0mm x 6.8mm
Weight	14g±1g
Vibration	7 Hz to 2K Hz, 3 axes
Shock	Duration: 0.5ms, 1500G, 3 axes

Health monitoring Tool

S.M.A.R.T.	Supported
i-S.M.A.R.T.	Supported (Utility for Windows, Linux)

Ordering Information

Capacity	Standard Grade	Industry Grade
8GB	D1SS-08GJ20AC1ES	D1SS-08GJ20AW1ES
16GB	D1SS-16GJ20AC1ES	D1SS-16GJ20AW1ES
32GB	D1SS-32GJ20AC1ET	D1SS-32GJ20AW1ET
64GB	D1SS-64GJ20AC1ET	D1SS-64GJ20AW1ET

DESIGN ◎ SERVICE ◎ QUALITY ◎ DELIVERY

Headquarter (Taiwan) : HTTP://WWW.INNODISK.COM E-MAIL:SALES@INNODISK.COM
TEL: +886-2-26963000 ADD: 9F., No.100, Sec. 1, Xintai 5th Rd., Xizhi Dist., New Taipei City, Taiwan(R.O.C.)
USA Office: usasales@innodisk.com / Europe: eusales@innodisk.com / Japan: jpsales@innodisk.com / China: sales_cn@innodisk.com

iNNODISK® Beyond your imagination

Mechanical diagram

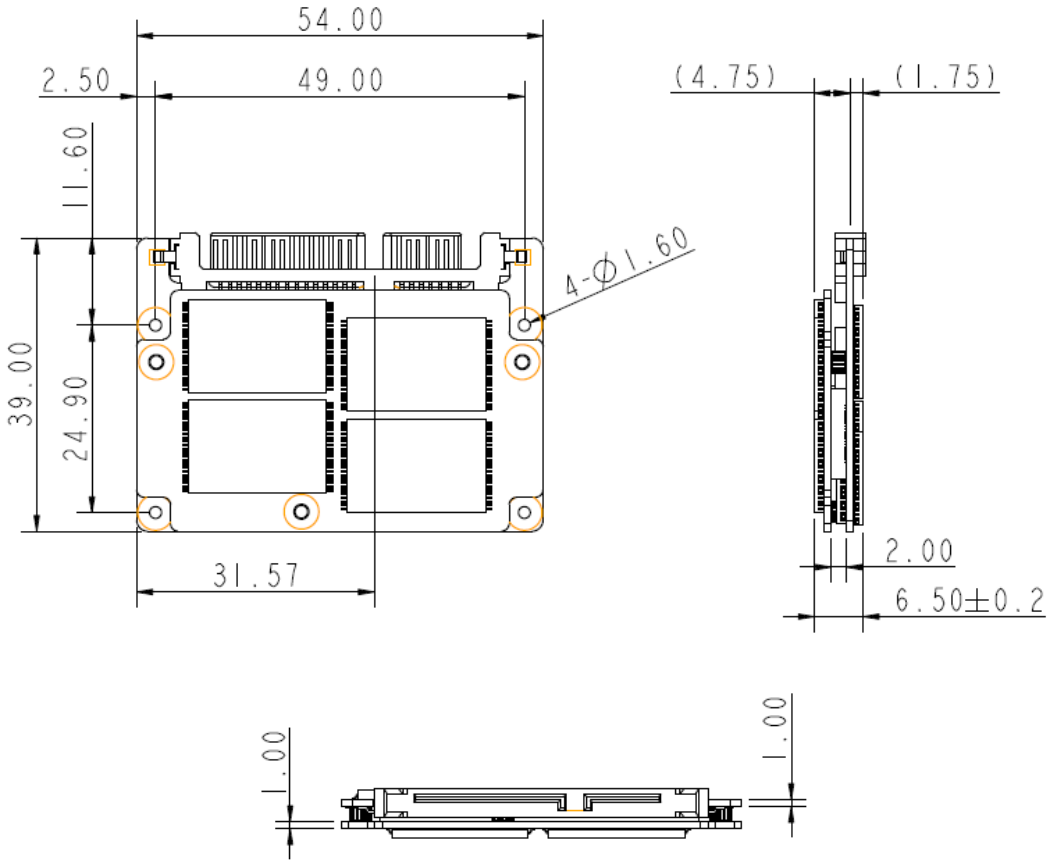

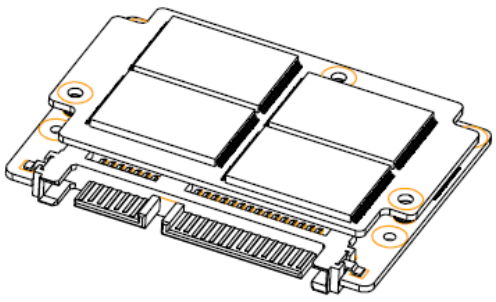

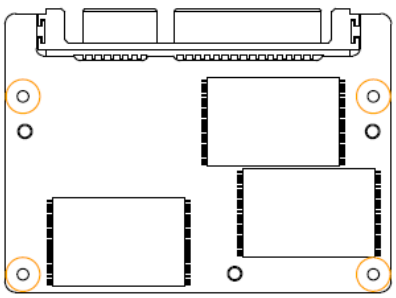

Tolerance ± 0.1mm

*The pin assignment, component keep out area of InnoDisk SATA Slim J200 is followed by JEDEC MO297 Specification.

Headquarter (Taiwan) : HTTP://WWW.INNODISK.COM E-MAIL:SALES@INNODISK.COM
TEL: +886-2-26963000 ADD: 9F., No.100, Sec. 1, Xintai 5th Rd., Xizhi Dist., New Taipei City, Taiwan(R.O.C.)
USA Office: usasales@innodisk.com / Europe: eusales@innodisk.com / Japan: jpsales@innodisk.com / China: sales_cn@innodisk.com

iNNODISK® Beyond your imagination