Datasheet

SATADOM-MV 3IE series

- SATA 6Gb/s interface
- iSMART disk health monitoring
- Intelligent error recovery system
- Excellent data transfer speed
- Write protection security
- Zero mechanical interference
- Anti-vibration mechanical design



Introduction

Innodisk SATADOM-MV 3IE is designed as the standard SATA 7 pin connector with SATA interface, and supports SATA III standard (6.0Gb/s) with excellent performance. Regarding of mechanical interference, InnoDisk SATADOM-MV 3IE absolutely replaces the traditional hard disk and makes personal computer, in any field, smaller and easier.

Innodisk SATADOM-MV 3IE effectively reduces the booting time of operation system and the power consumption is less than hard disk drive (HDD), and complies with ATA protocol, no additional drives are required, and can be configured as a boot device or data storage device.

SATADOM-MV

3IE series

Contact us for more information about the SATADOM-MV 3IE.

Innodisk is a service-driven provider of industrial embedded flash and DRAM storage products and technologies, with a focus on the cloud computing, industrial/embedded, and aerospace and defense industries.

Diagram

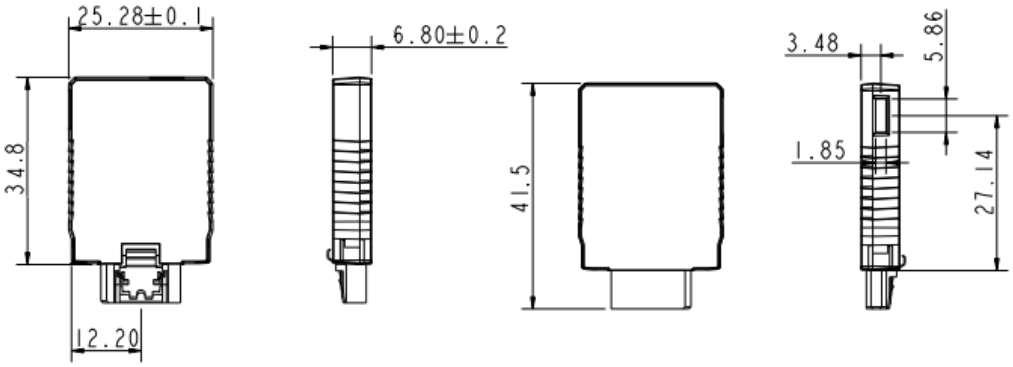

Specifications

Interface	SATA III
Flash Type	iSLC
P/E cycle	20,000
Capacity	8GB~64GB
Max. Channels	4
Sequential R/W (MB/sec, max.)	460/370
Max. Power Consumption	1 W (5V x 200 mA)
Thermal Sensor	WT only
Extended DRAM buffer	-
H/W Write Protect	√
ATA Security	√
S.M.A.R.T.	√
Dimension (WxLxH)	25.2 X 41.5 X 6.8 mm
Environment	Vibration: 20G @7~2000Hz Shock: 1500G @ 0.5ms Storage Temperature: -55°C ~ +95°C MTBF: 3 million hours

Headquarters (Taiwan)
5F., No. 237, Sec. 1, Datong Rd.,
Xizhi Dist., New Taipei City,
Taiwan (R.O.C.)
Tel: +886-2-77033000
Email: sales@innodisk.com

Branch Offices:
USA
usasales@innodisk.com
+1-510-770-9421
Europe
eusales@innodisk.com
+31-(0)40-282-1818
Japan
jpsales@innodisk.com
+81-45-594-7581
China
sales_cn@innodisk.com
+86-755-21673689
www.innodisk.com

© 2012 Innodisk Corporation.
All right reserved. Specifications are subject to change without prior notice.

Ordering Information

Operation Temp.	8GB	16GB	32GB	64GB
Standard Grade (0°C ~ +70°C)	DHSMV-08GD073C1SC(F)	DHSMV-16GD063C1DC(F)	DHSMV-32GD063C1QC(F)	DHSMV-64GD063C1QC(F)
Industrial Grade (-40°C ~ +85°C)	DHSMV-08GD072W1SC(F)	DHSMV-16GD062W1DC(F)	DHSMV-32GD062W1QC(F)	DHSMV-64GD062W1QC(F)

20141001