EDC 9000 VERTICAL



FEATURES

- Excellent data transfer speed
- Intelligent system for error recovery
- Mechanical design for anti-vibration
- Support multi-sector transfers
- Support Auto Stand-by and Sleep Mode
- Support power cycling

R: 105MB W: 102MB | Write protect | Power cycling | i-SMART | Wear Leveling | Support Sleep mode

Specifications

Connector Type	44-pin vertical
Flash Type	SLC (Single Level Cell)
Density	BGA:4GB-32GB
Interface	Standard IDE interface
Sustained R/W Performance	Read：105 MB/sec (max.) Write：102MB/sec (max.)

Environmental

DC Input	+5V DC ± 5%
Power consumption (Max.)	Read: 125 mA Write: 120mA Idle: 1.3mA
Operating Temperature	0°C~+70°C (Standard Grade) -40°C~+85°C (Industrial Grade)
Storage Temperature	-55°C~+95°C
Humidity	Relative Humidity: 10-95%, non-condensing
Flash Endurance	100,000 program/erase cycles
MTBF	> 3,000,000 hours
Certification	CE, FCC, RoHS
Warranty	5years

Mechanicals

Dimension (W x L x H)	50.3x27.3x7.5mm
Weight	7.5g±5g
Vibration	20G, 7 Hz to 2K Hz, , 3 axes
Shock	1500G, Duration: 0.5ms, , 3 axes

Health monitoring Tool

S.M.A.R.T.	Supported
i-S.M.A.R.T.	Supported (Utility for Windows, Linux)

Ordering Information

Capacity	Standard Grade	Industrial Grade
4GB	DE4H-04GD71ACADS	DE4H-04GD71AWADS
8GB	DE4H-08GD71ACAQS	DE4H-08GD71AWAQS
16GB	DE4H-16GD71ACAQS	DE4H-16GD71AWAQS
32GB	DE4H-32GD71ACAQS	DE4H-32GD71AWAQS

DESIGN ◎ SERVICE ◎ QUALITY ◎ DELIVERY

Headquarter (Taiwan) : HTTP://WWW.INNODISK.COM E-MAIL:SALES@INNODISK.COM
TEL: +886-2-26963000 ADD: 9F., No.100, Sec. 1, Xintai 5th Rd., Xizhi Dist., New Taipei City, Taiwan(R.O.C.)
USA Office: usasales@innodisk.com / Europe: eusales@innodisk.com / Japan: jpsales@innodisk.com / China: sales_cn@innodisk.com

Mechanical Dimension

Mechanical Dimension: 50.3x27.3x7.5 mm(W/T/H)

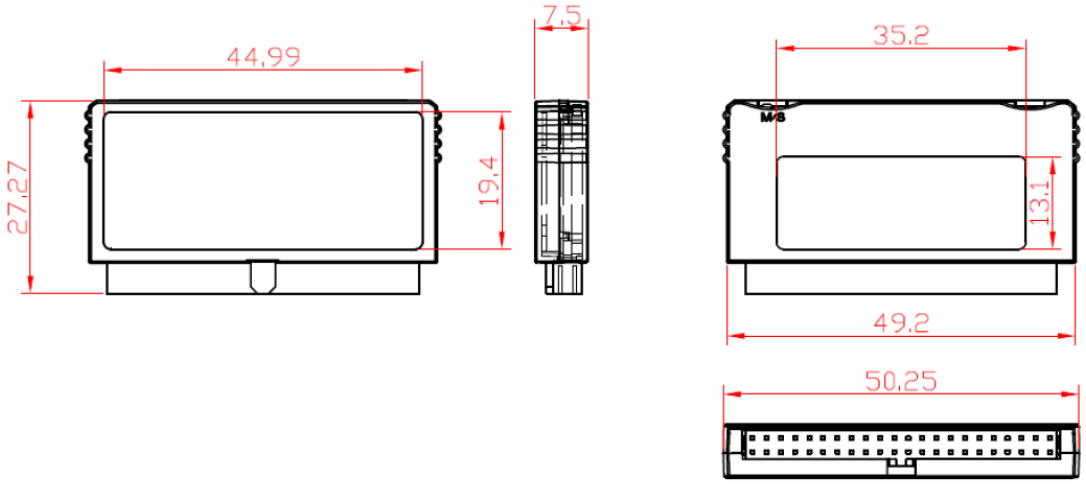

Power Cycling Management

InnoDisk's Power Cycling Management in the case of sudden power outage to an SSD. The majority of data protection takes place before power is cycled after an abnormal power failure. Any residual data corruption after system power-on is handled by data sorting algorithms to ensure data integrity in Flash storage.

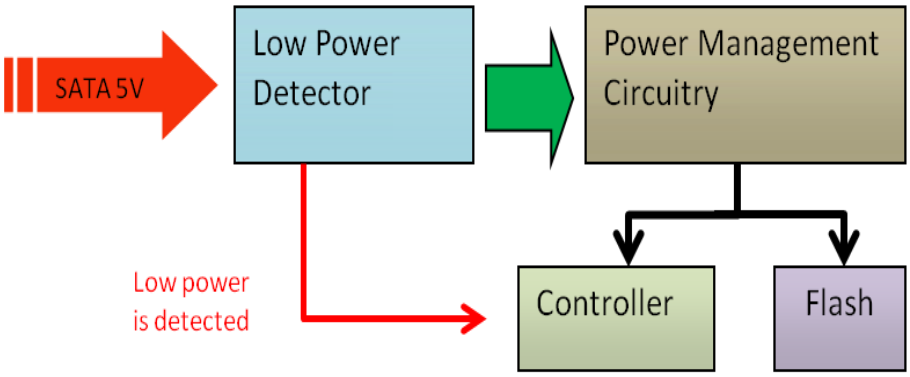

- No data lost of old sector
- Suddenly power off before card is not ready after last write command ,
  Maximum 32 sector(4GB-8GB) data loss
  Maximum 64 sector(16GB-32GB) data loss

DESIGN ◎ SERVICE ◎ QUALITY ◎ DELIVERY