Innolite EDC Vertical



FEATURES

- Support static wear leveling algorithm
- S.M.A.R.T. & i-S.M.A.R.T. supported
- Intelligent system for error recovery
- High reliability & compatibility
- Cost efficiency

R:45MB/s W:15MB/s | PIO 0~4 Support | MDMA UDMA | Wear Leveling | S.M.A.R.T | Write Protect

Specifications

Connector Type	2.00 mm Pin Pitch (2x22) 2.54 mm Pin Pitch (2x20)
Flash Type	MLC (Multi Level Cell)
Density	4GB~32GB
Transfer Mode	PIO 0~4, MDMA 0~4, UDMA 0~4
Sustained R/W Performance	Read：40MB/sec (max.) Write：15MB/sec (max.)

Environmental

DC Input	+3.3V/+5V DC ± 5%
Power consumption (Max.)	Read: 125 mA Write: 120 mA Idle: 1.3 mA
Operating Temperature	0°C~+70°C (Standard Grade) -20°C~+85°C (Extended Grade)
Storage Temperature	-50°C~+95°C
Humidity	Relative Humidity: 10-95%, non-condensing
Flash Endurance	3,000 program/erase cycles
MTBF	> 3,000,000 hours
Certification	CE, FCC, RoHS
Warranty	2 years

Mechanicals

Dimension (W x L x H)	40 pin: 60.2 x 27.3 x 6.4 mm 44 pin: 50.3 x 27.3 x 5.8 mm
Weight	9g±1g
Vibration	7 Hz to 2K Hz, 20G, 3 axes
Shock	Duration: 0.5ms, 1500G, 3 axes

Health monitoring Tool

S.M.A.R.T.	Supported
i-S.M.A.R.T.	Supported (Utility for Windows, Linux)

Ordering Information

Capacity	Standard Grade	Extended Grade
4GB	DEXH-04GD51AC1SN	DEXH-04GD51AE1SN
8GB	DEXH-08GD51AC1DN	DEXH-08GD51AE1DN
16GB	DEXH-16GD51AC1DN	DEXH-16GD51AE1DN
32GB	DEXH-32GD51AC1DN	DEXH-32GD51AE1DN

X:0=40pin,4=44pin

DESIGN ◎ SERVICE ◎ QUALITY ◎ DELIVERY

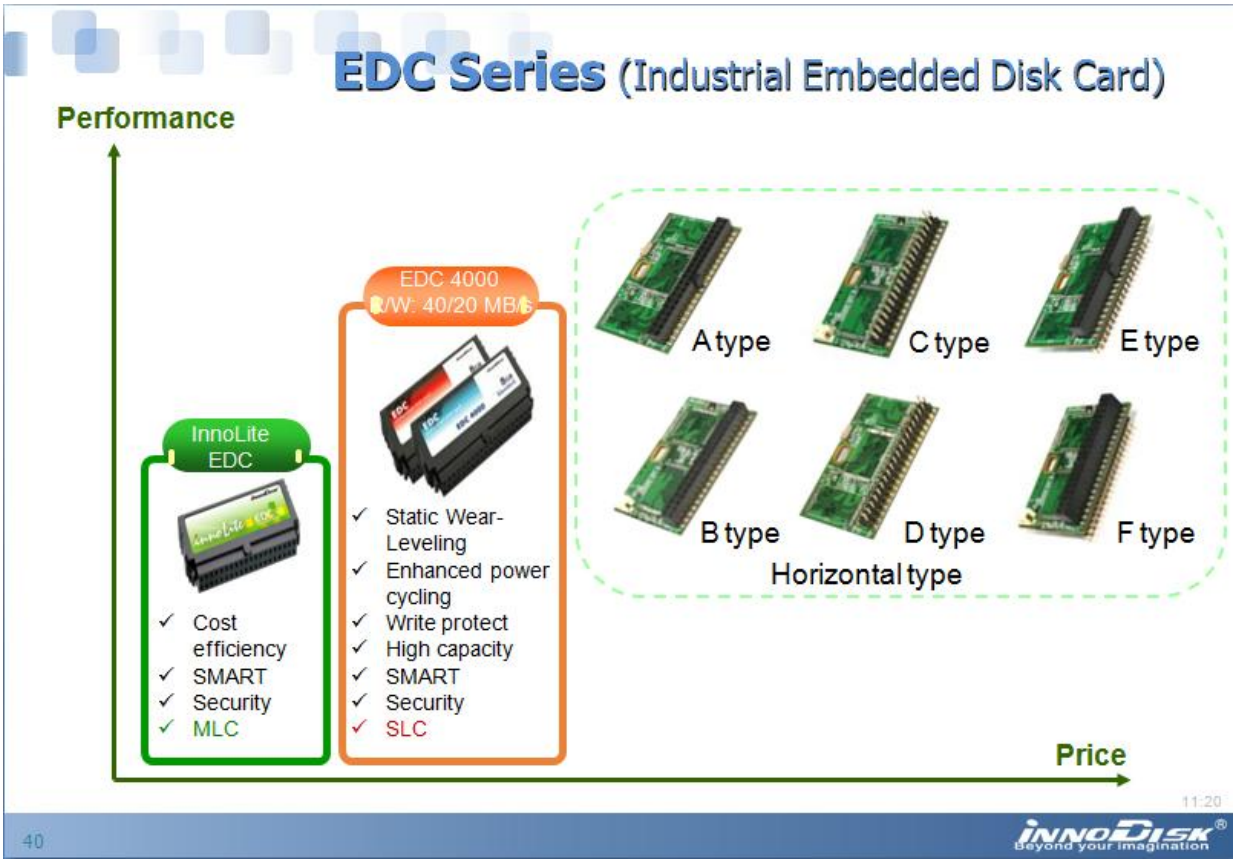

Power Cycling Management

InnoDisk's Power Cycling Management in the case of sudden power outage to an SSD. The majority of data protection takes place before power is cycled after an abnormal power failure. Any residual data corruption after system power-on is handled by data sorting algorithms to ensure data integrity in Flash storage.

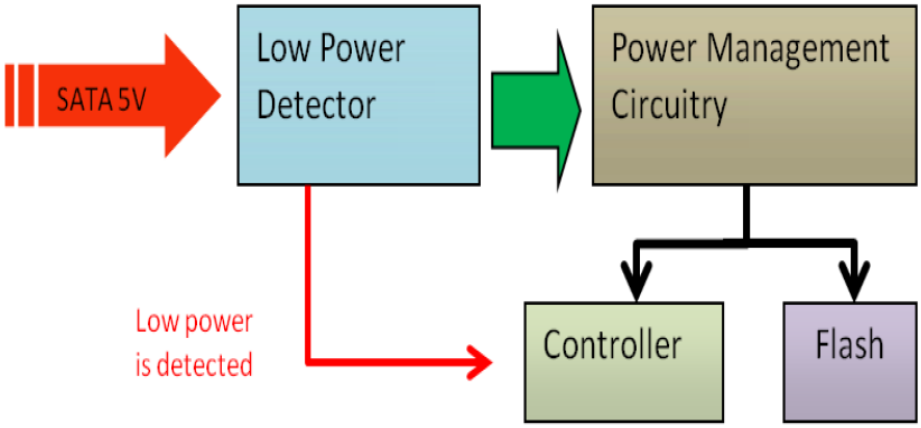

DESIGN • SERVICE • QUALITY • DELIVERY