Datasheet

mSATA 2SR series

- Compliant with MIL-STD-810-F/G
- Data Security (QEraser/ SEraser/ Destroy/ Write Protect)
- Conformal coating (Optional)
- Excellent data transfer rate

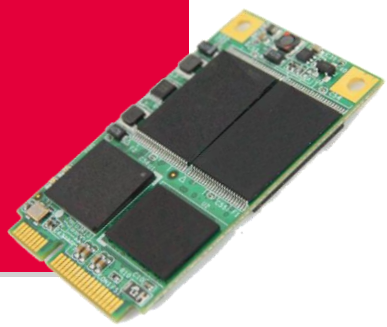

Introduction

Innodisk's mSATA 2SR is designed in a standard mini PCIe form factor with a SATA interface. It comes with several data security functions, including SEraser, QEraser, Destroy, Write Protect. The mSATA 2SR also supports the SATA II standard (3.0Gb/s) and is compliant with JEDEC MO-300 standards and SATA-IO mini SATA standards. The mSATA 2SR is an SLC-based flash device and is available in capacities from 4GB up to 64GB.

mSATA 2SR series

Drawing

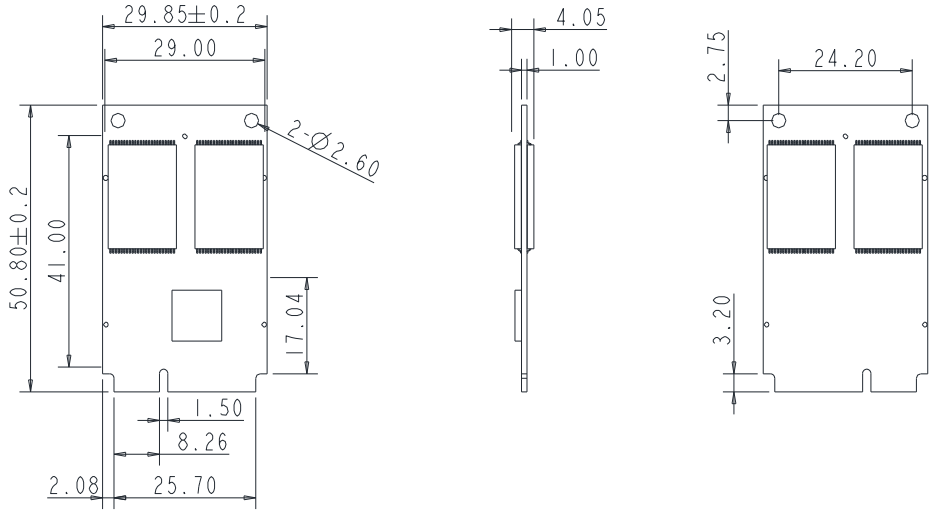

Contact us for more information about the mSATA 2SR

Innodisk is a service-driven provider of industrial embedded flash and DRAM storage products and technologies, with a focus on the industrial/embedded, aerospace and defense, and cloud computing industries.

Specifications

Interface	SATA II
Flash Type	SLC
Flash P/E Cycle Limit	100,000
Capacity	4GB~64GB
Max. Channels	4
Sequential R/W (MB/sec, max.)	110 / 90
Max. Power Consumption	1.72 W (3.3V x 520 mA)
Thermal Sensor	√
External DRAM Buffer	√
H/W Write Protect	–
Pin7 Power	–
ATA Security	Supported
S.M.A.R.T.	Supported
Dimension (WxLxH)	29.8 X 50.8 X 4.1 mm
Environment	Vibration: 20G @7~2000Hz Shock: 1500G @ 0.5ms Storage Temperature: -55°C ~ +95°C MTBF: 3 million hours

Ordering Information

Operation Temp.	4GB	8GB	16GB	32GB	64GB
Standard Grade (0°C ~ +70°C)	DRMSR-04GJ21AC1QB	DRMSR-08GJ21AC1QB	DRMSR-16GJ21AC1QB	DRMSR-32GJ21AC1QB	DRMSR-64GJ21AC1QB
Industrial Grade (-40°C ~ +85°C)	DRMSR-04GJ21AW1QB	DRMSR-08GJ21AW1QB	DRMSR-16GJ21AW1QB	DRMSR-32GJ21AW1QB	DRMSR-64GJ21AW1QB

Headquarters (Taiwan)
9F., No.100, Sec. 1, Xintai 5th Rd., Xizhi Dist., New Taipei City, Taiwan (R.O.C.)
Tel: +886-2-26963000
Email: sales@innodisk.com

Branch Offices:
USA
usasales@innodisk.com
+1-510-770-9421
Europe
eusales@innodisk.com
+31-040-282-2382
Japan
jpsales@innodisk.com
+81-3-6661-9846
China
sales_cn@innodisk.com
+86-755-21673689
www.innodisk.com

© 2012 Innodisk Corporation. All right reserved. Specifications are subject to change without prior notice.

20130411