Datasheet

CFexpress 3TE2 series

- PCIe Gen. III x2, NVMe 1.2
- Excellent data transfer speed
- Zero mechanical interference
- LDPC ECC engine supported.
- End-to-end Data Path Protection
- Support Write Protect Function



Introduction

Innodisk CFexpress 3TE2 is followed by CFexpress 1.0 type B, with PCIe interface. CFexpress 3TE2 supports PCIe Gen III x2, and it is compliant with NVM 1.2 providing excellent performance. Moreover, it adopts industrial 3D TLC NAND Flash providing high endurance and reliability. With sophisticated error detection and correction (ECC) functions, the module can ensure full End-to-end Data Path Protection that secures the data transmission between host system and NAND Flash.

Innodisk CFexpress 3TE2 is a small and removable memory card providing low latency and extreme speed but with low power consumption and efficient heat dissipation. It is ideal for gaming, edge computing and professional digital recording.

CFexpress
3TE2 series

Contact us for more information about the CFexpress 3TE2.

Innodisk is a service-driven provider of industrial embedded flash and DRAM storage products and technologies, with a focus on the cloud computing, industrial/embedded, and aerospace and defense industries.

Headquarters (Taiwan)
5F., No. 237, Sec. 1, Datong Rd., Xizhi Dist., New Taipei City 221, Taiwan
Tel: +886-2-7703-3000
Email: sales@innodisk.com

Branch Offices:
USA
usasales@innodisk.com
+1-510-770-9421
Europe
eusales@innodisk.com
+31-40-3045-400
Japan
jpsales@innodisk.com
+81-3-6667-0161
China
sales_cn@innodisk.com
+86-755-21673689
www.innodisk.com

© 2020 Innodisk Corporation.
All right reserved. Specifications are subject to change without prior notice.

20200215

Diagram

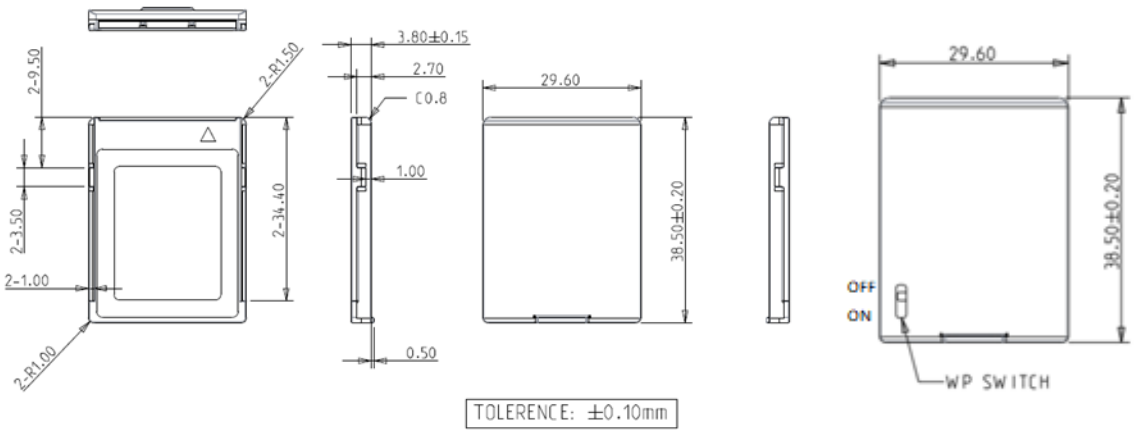

Specifications

Interface	PCIe Gen. III x2
Flash Type	3D TLC
P/E cycle	3,000
Capacity	64GB~512GB
Max. Channels	4
Sequential R/W (MB/sec, max.)	1380/660
Max. Power Consumption(rms)	2.23W(3.3Vx676mA)
Thermal Sensor	√
External DRAM buffer	-
H/W Write Protect	√(optional)
Dimension (WxLxH)	29.6 X 38.5 X 3.8 mm
Environment	Vibration: 20G @7~2000Hz Shock: 1500G @ 0.5ms Storage Temperature: -55°C ~ +95°C MTBF: 3,000,000

Ordering Information

Operation Temp.	64GB	128GB	256GB	512GB
Standard Grade (0°C ~ +70°C)	DECFX-64GM61ECADF(W)	DECFX-A28M61ECAQF(W)	DECFX-B56M61ECAQF(W)	DECFX-C12M61ECAQF(W)
Industrial Grade (-40°C ~ +85°C)	DECFX-64GM61EWADF(W)	DECFX-A28M61EWAQF(W)	DECFX-B56M61EWAQF(W)	DECFX-C12M61EWAQF(W)

W: optional HW Write Protect