CF-SATA



FEATURES

- Replace solution of CF
- 50pins SATA interface
- Support industrial grade up to 64GB
- High-reliability: anti-shock & vibration
- Excellent data transfer speed
- Static wear-leveling algorithm
- Support Thermal Sensor

SATA II 3.0Gb/s | i SLC Technology | Wear Leveling

R: 120MB W: 95MB | S.M.A.R.T | Thermal Sensor

Specifications

Connector Type	CF 50pin
Flash Type	iSLC (InnoDisk Single Level Cell)
Density	2GB, 4GB, 8GB, 16GB, 32GB, 64GB
Transfer Mode	SATA II 3.0Gb/s
Sustained R/W Performance	Read：120 MB/sec (max.) Write：95 MB/sec (max.)

Environmental

DC Input	+5V DC ± 5%
Power consumption (Max.)	Read: 230 mA Write: 330 mA Idle: 130 mA
Operating Temperature	0^0C~+70^0C (Standard Grade) -20^0C~+85^0C (Industrial Grade)
Storage Temperature	-55^0C~+95^0C
Humidity	Relative Humidity: 10-95%, non-condensing
Flash Endurance	30,000 program/erase cycles
MTBF	> 4,000,000 hours
Certification	CE, FCC, RoHS
Warranty	3 years

Mechanicals

Dimension (W x L x H)	42.8mm x 36.4mm x 3.3mm
Weight	9g±1g
Vibration	7 Hz to 2K Hz, 3 axes
Shock	Duration: 1500G, 0.5ms, 3 axes

Health monitoring Tool

S.M.A.R.T.	Supported
i-S.M.A.R.T.	Supported (Utility for Windows, Linux)

Special Features

Security	Write Protection
LED	Supported
Thermal Sensor	Supported

Ordering Information

Capacity	Standard Grade	Industrial Grade
2GB	DC1M-02GJ301C1SN	DC1M-02GJ301E1SN
4GB	DC1M-04GJ301C1DN	DC1M-04GJ301E1DN
8GB	DC1M-08GJ301C1QN	DC1M-08GJ301E1QN
16GB	DC1M-16GJ301C1QN	DC1M-16GJ301E1QN
32GB	DC1M-32GJ301C1QN	DC1M-32GJ301E1QN
64GB	DC1M-64GJ301C1QN	DC1M-64GJ301E1QN

*DC1S (hardware write protect)

DESIGN ◎ SERVICE ◎ QUALITY ◎ DELIVERY

Mechanical Dimension

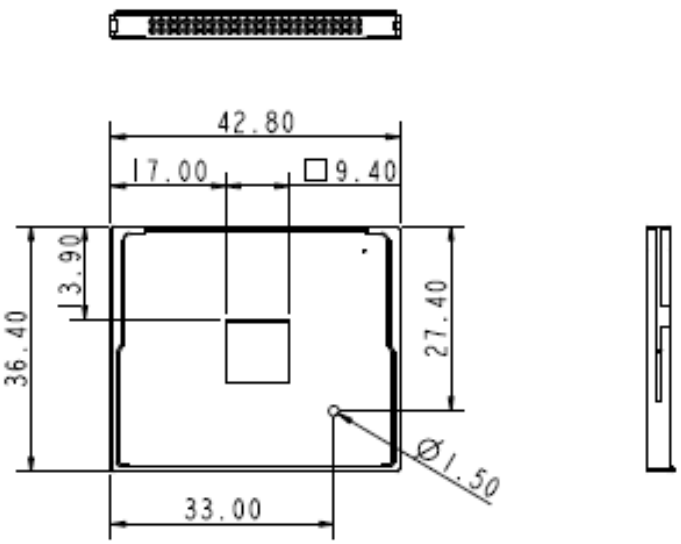

Tolerance ± 0.1

CF SATA signal

SATA Signal		
Pin	Pure IDE Mode Defination	CF_SATA Protocol
1	DGND	DGND
8	DGND	AGND
10	DGND	TX+
11	DGND	TX–
12	DGND	AGND
13	VCC5	VCC5
14	DGND	AGND
15	DGND	RX-
16	DGND	RX+
17	DGND	AGND
38	VCC5	VCC5

CF SATA advantage

1. CF SATA complies with Serial ATA by extracting unusual pins from CF50 pin
2. InnoDisk CF-SATA has the same mechanical design with Compact Flash card
3. CF SATA performance has triple times than CF Card

Host Reference Circuit Design

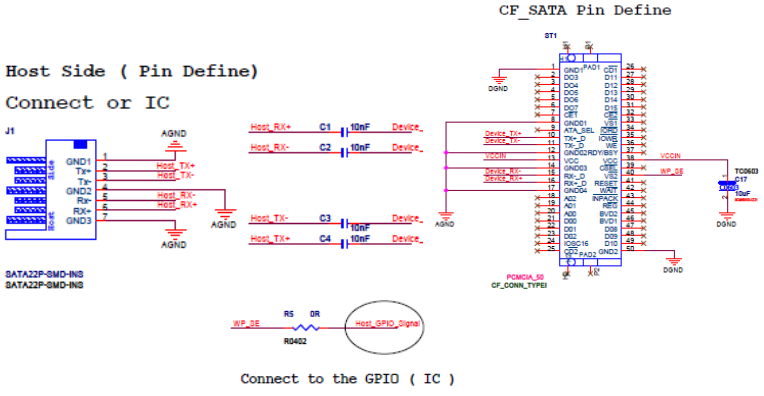

DESIGN ◎ SERVICE ◎ QUALITY ◎ DELIVERY