ESXS-2302

Multipurpose PCIe to mPCIe & M.2 adaptor

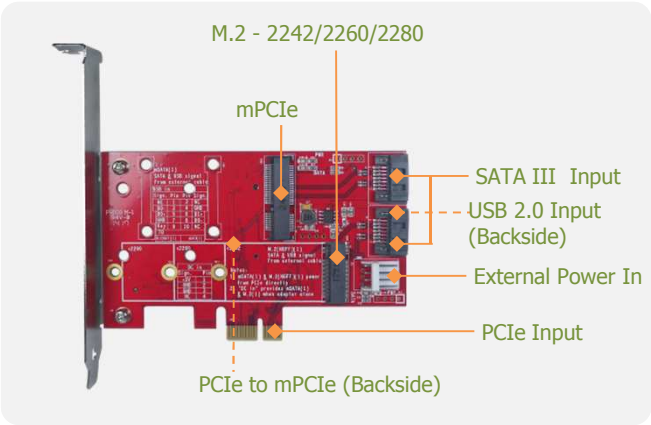

Features

- Supports low profile/standard PCIe form factor.
- Supports external SATA III and USB 2.0 signal to mPCIe & M.2 2242/2260/2280(Front Side).
- PCIe to mPCIe pass-through design (BackSide).
- 30μ" golden finger, 3 years warranty.
- Industrial design. Manufactured in innodisk Taiwan.

Mechanical Drawing

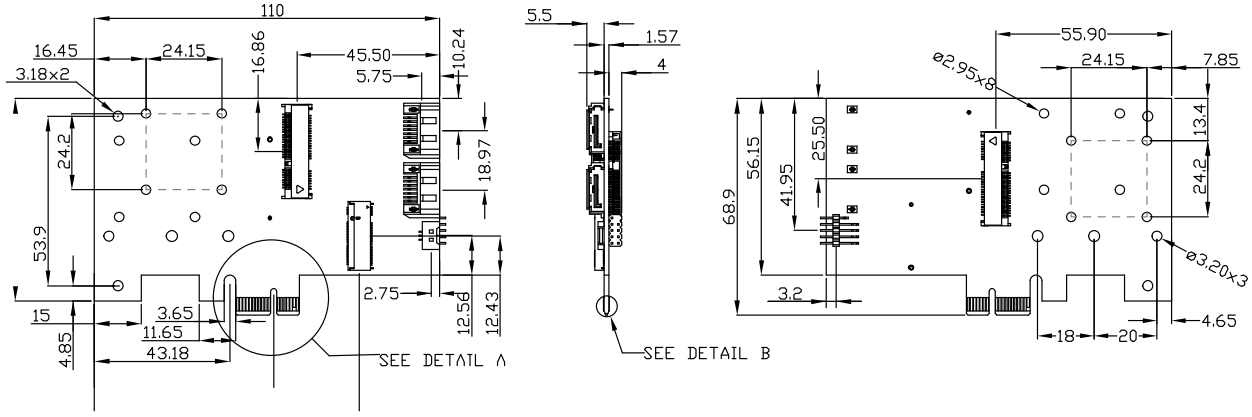

Specifications

Form-Factor	Standard PCIe
Input I/F	PCIe Gen 1, SATA III, USB 2.0
Output I/F	USB 2.0, SATA III(frontside), PCIe(backside mPCIe)
Output Connector	mPCIe x 2, M.2 x 1(2242/2260/2280)
Max TDP	TBD
Dimension (WxLxH)	110 x 68.9 x 12.3mm.
Temperature	Operation: STD: 0°C ~ +70°C
Environment	Vibration: 5G @7~2000Hz, Shock: 50G @ 0.5ms
Notes	

Headquarters (Taiwan)
5F., No. 237, Sec. 1, Datong Rd.,
Xizhi Dist., New Taipei City 221,
Taiwan
Tel: +886-2-77033000
Email: sales@innodisk.com

Branch Offices:
USA
usasales@innodisk.com
+1-510-770-9421
Europe
eusales@innodisk.com
+31-040-282-1818
Japan
jpsales@innodisk.com
+81-3-6661-9846
China
sales_cn@innodisk.com
+86-755-21673689

www.innodisk.com

© 2014 Innodisk Corporation.
All right reserved. Specifications
are subject to change without
prior notice.

October 13, 2014

Order information

ESXS-2302-C1
Multipurpose PCIe to mPCIe & M.2 adaptor