EMP4-1101
mPCIe to PATA Module

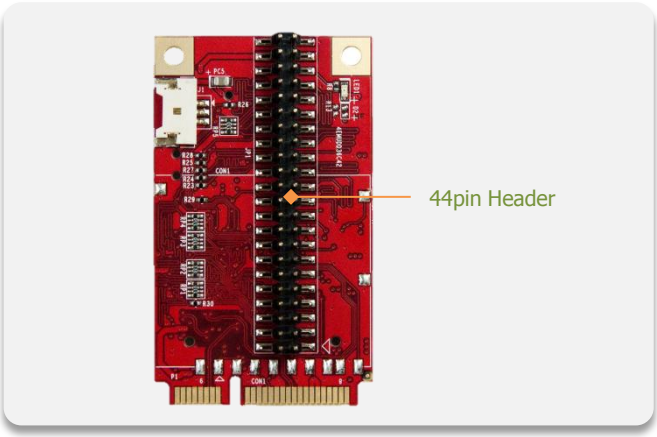

Features

- mPCIe form factor with PATA 44pin connector.
- Ultra low power consumption.
- Excellent data transfer speed.
- 30µ golden finger, 3 years warranty.
- Industrial design, manufactured in innodisk Taiwan

Mechanical Drawing

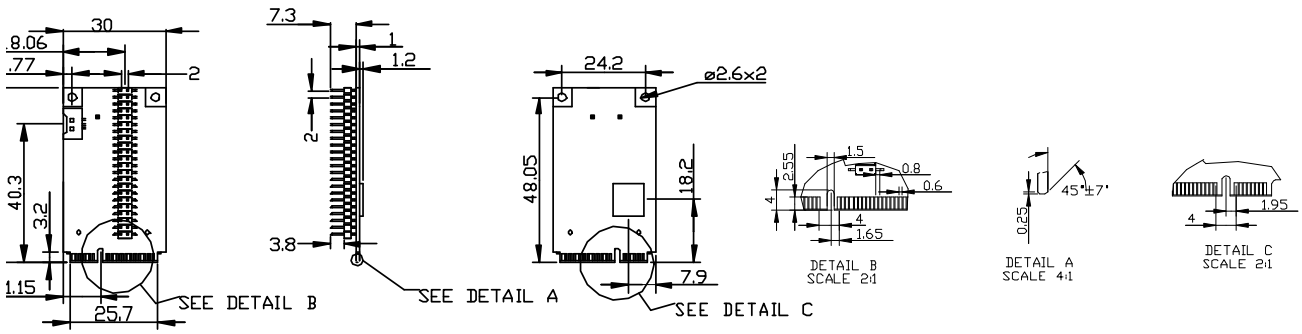

Specifications

Form-Factor	mPCIe
Input I/F	PCI Express 1.0
Output I/F	PATA
Output Connector	44pin header x 1
Max TDP	1.8W (3.3V x 550mA)
Dimension (WxLxH)	30 x 50.95 x 9.5mm, Weight: 8g
Temperature	Operation: STD: 0˚C ~ +70˚C Storage: -55˚C ~ +95˚C
Environment	Vibration: 5G @7~2000Hz, Shock: 50G @ 0.5ms
Notes	

Headquarters (Taiwan)
5F., No. 237, Sec. 1, Datong Rd., Xizhi Dist., New Taipei City 221, Taiwan
Tel: +886-2-77033000
Email: sales@innodisk.com

Branch Offices:
USA
usasales@innodisk.com
+1-510-770-9421
Europe
eusales@innodisk.com
+31-040-282-1818
Japan
jpsales@innodisk.com
+81-45-594-7581
China
sales_cn@innodisk.com
+86-755-21673689

www.innodisk.com

© 2014 Innodisk Corporation.
All right reserved. Specifications are subject to change without prior notice.

September 18, 2014

Order Information

EMP4-1101-C1
mPCIe to PATA Module