EMPV-1203
mPCIe to dual VGA & 18/24 bit TTL module

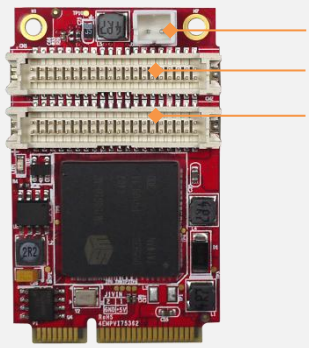

Features

- mPCIe to dual VGA & 18/24 bit TTL Graphic Card.
- VGA Output: 1920x1080, up to 75Hz vertical rate.
- 18/24 bit TTL supports up to 1920 x 1080
- Allow for 90º, 180º, and 270º rotation of on-screen images
- 30μ" golden finger, 3 years warranty.
- Industrial design. Manufactured in innodisk Taiwan

Mechanical Drawing

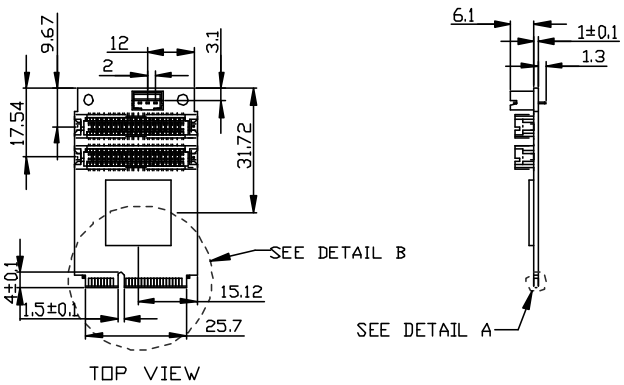

Dual VGA(CN1)

Signal	Pin	Pin	Signal
+5V	2	1	+3.3V
+5V	4	3	+3.3V
	6	5	
GND	8	7	GND
R_1	10	9	B_1
G_1	12	11	
GND	14	13	GND
H_Sync_1	16	15	DDC_SCL_1
V_Sync_1	18	17	DDC_SDA_1
GND	20	19	GND
R_0	22	21	B_0
G_0	24	23	
GND	26	25	GND
H_Sync_0	28	27	DDC_SCL_0
V_Sync_0	30	29	DDC_SDA_0
GND	32	31	GND
	34	33	
	36	35	
GND	38	37	GND
	40	39	

18/24 bits TTL(CN2)

Signal	Pin	Pin	Signal
+5V	2	1	+3.3V
GND	4	3	GND
+5V	6	5	+3.3V
GND	8	7	Vcon
P1	10	9	P0
P3	12	11	P2
P5	14	13	P4
P7	16	15	P6
P9	18	17	P8
P11	20	19	P10
P13	22	21	P12
P15	24	23	P14
P17	26	25	P16
P19	28	27	P18
P21	30	29	P20
P23	32	31	P22
GND	34	33	GND
V_Sync	36	35	SHFCLK
H_Sync	38	37	M
ENVEE	40	39	ENBKL

Specifications

Form-Factor	mini PCIe
Input I/F	PCI Express 1.0
Output I/F	VGA x 2, 18/24 bit TTL
Output Connector	40pin 1.25mm x 2(40DP-1.25)
Controller	SM750
Max TDP	3.3V x 0.6A = 1.98W
Dimension (WxLxH)	31.5 x 50.95 x 8.2 mm. Weight: 7.5g.
Temperature	Operation: STD: 0℃ ~ +70℃
Environment	Vibration: 5G @7~2000Hz, Shock: 50G @ 0.5ms
Notes	**Need** to connect external 5V power for TTL panel. **OS** Support : Windows XP (32 bit), Windows 7 (32/64 bit), Windows 8 (64 bit), Linux Ubuntu 12.10(64 bit), Linux Fedora 18, Linux RedHat Enterprise 6.3. **Please** download driver from Myinnodisk website.

Headquarters (Taiwan)
5F., No. 237, Sec. 1, Datong Rd., Xizhi Dist., New Taipei City 221, Taiwan
Tel: +886-2-77033000
Email: sales@innodisk.com

Branch Offices:
USA
usasales@innodisk.com
+1-510-770-9421
Europe
eusales@innodisk.com
+31-040-282-1818
Japan
jpsales@innodisk.com
+81-45-594-7581
China
sales_cn@innodisk.com
+86-755-21673689

www.innodisk.com

© 2014 Innodisk Corporation. All right reserved. Specifications are subject to change without prior notice.

September 18, 2014

Order information

EMPV-1203-C1
mPCIe to dual VGA & 18/24 bit TTL module
7W9000000010
Dual VGA Cable