EMPV-1202
mPCIe to VGA & 18/24 bit LVDS module

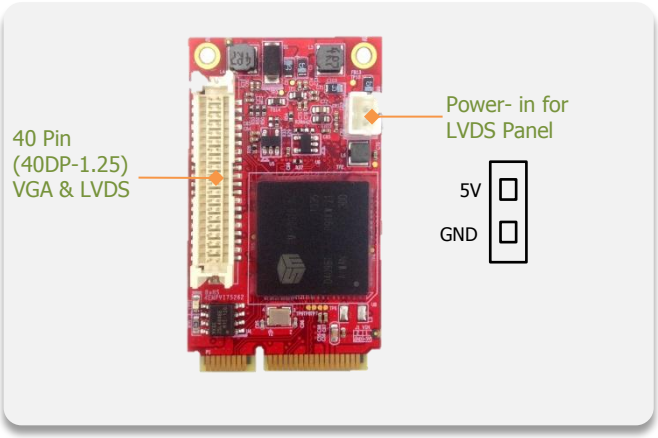

Features

- VGA Output up to 1920x1080, up to 75Hz vertical rate.
- 18/24 bit LVDS supports up to 1600 x 1200.
- Allow for 90º, 180º, and 270º rotation of on-screen images.
- 30µ" golden finger, 3 years warranty.
- Industrial design. Manufactured in innodisk Taiwan.

Mechanical Drawing

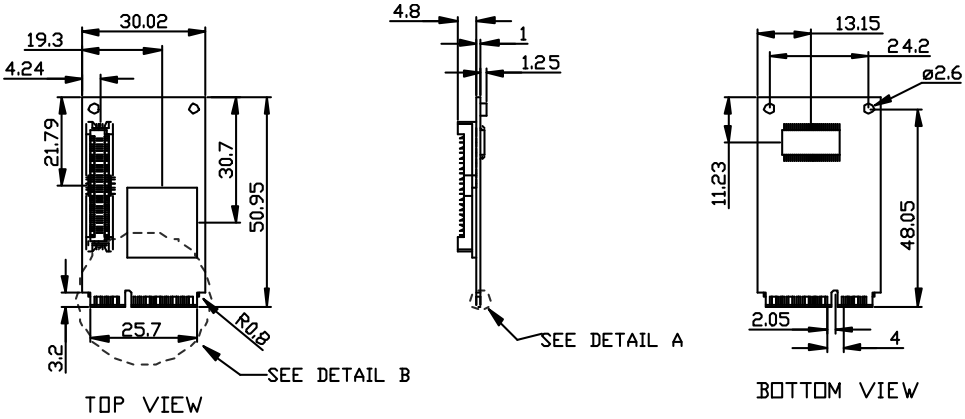

24 bits LVDS + VGA

Signal	Pin	Pin	Signal
+5V	2	1	+3.3V
+5V	4	3	+3.3V
I2C_DATA	6	5	I2C_CLK
GND	8	7	GND
LVDS_D0+	10	9	LVDS_D1+
LVDS_D0-	12	11	LVDS_D1-
GND	14	13	GND
LVDS_D2+	16	15	LVDS_D3+
LVDS_D2-	18	17	LVDS_D3-
GND	20	19	GND
R_0	22	21	B_0
G_0	24	23	
GND	26	25	GND
H_Sync	28	27	DDC_SCL
V_Sync	30	29	DDC_SDA
GND	32	31	GND
LVDS_CLK+	34	33	
LVDS_CLK-	36	35	
GND	38	37	GND
	40	39	

Specifications

Form-Factor	mini PCIe
Input I/F	PCI Express 1.0
Output I/F	VGA, 18/24 bit LVDS
Output Connector	40pin 1.25mm (40DP-1.25)
Controller	SM750
Max TDP	1.98W(3.3V x 600mA)
Dimension (WxLxH)	50.95 x 30 x 8.2 mm, Weight: 8.5g
Temperature	Operation: STD: 0˚C ~ +70˚C
Environment	Vibration: 5G @7~2000Hz, Shock: 50G @ 0.5ms
Notes	Need to connect external 5V power for LVDS panel. OS Support : Windows XP (32 bit), Windows 7 (32/64 bit), Windows 8 (64 bit), Linux Ubuntu 12.10(64 bit), Linux Fedora 18, Linux RedHat Enterprise 6.3. Please download driver from Myinnodisk website.

Order information

EMPV-1202-C1
mPCIe to VGA & 18/24 bit LVDS module

Headquarters (Taiwan)
5F., No. 237, Sec. 1, Datong Rd., Xizhi Dist., New Taipei City 221, Taiwan
Tel: +886-2-77033000
Email: sales@innodisk.com

Branch Offices:
USA
usasales@innodisk.com
+1-510-770-9421
Europe
eusales@innodisk.com
+31-040-282-1818
Japan
jpsales@innodisk.com
+81-45-594-7581
China
sales_cn@innodisk.com
+86-755-21673689

www.innodisk.com

© 2014 Innodisk Corporation. All right reserved. Specifications are subject to change without prior notice.

April 15, 2015