# E2SS-32R1
## 2.5” SSD to Dual SATA III RAID Module

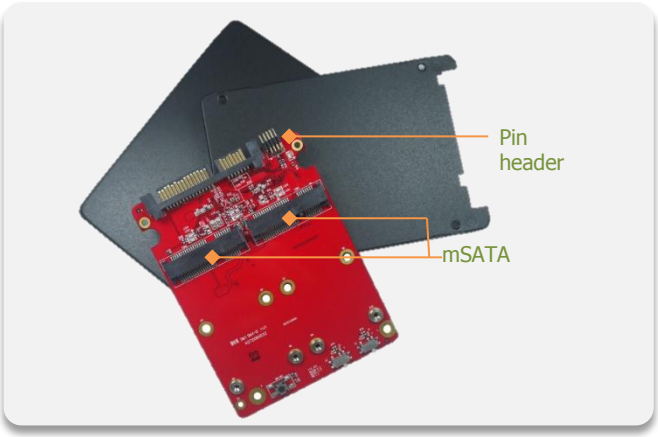


## Features

- –Supports SATA to dual SATA III Port Multiplier.
- –Supports H/W RAID 0/1 over SATA.
- –Supports USB 2.0 to dual SATA III.
- –Pin header for LED connection.
- –3 years warranty.
- –Industrial design, manufacture in innodisk Taiwan

| | LED Pin Assignment | USB 2.0 |
|---|---|---|
| 1 | GND | GND |
| 2 | CON 2 Error | D+ |
| 3 | CON 2 Access | D- |
| 4 | CON 1 Error | 5V |
| 5 | CON 1 Access | |

## Mechanical Drawing

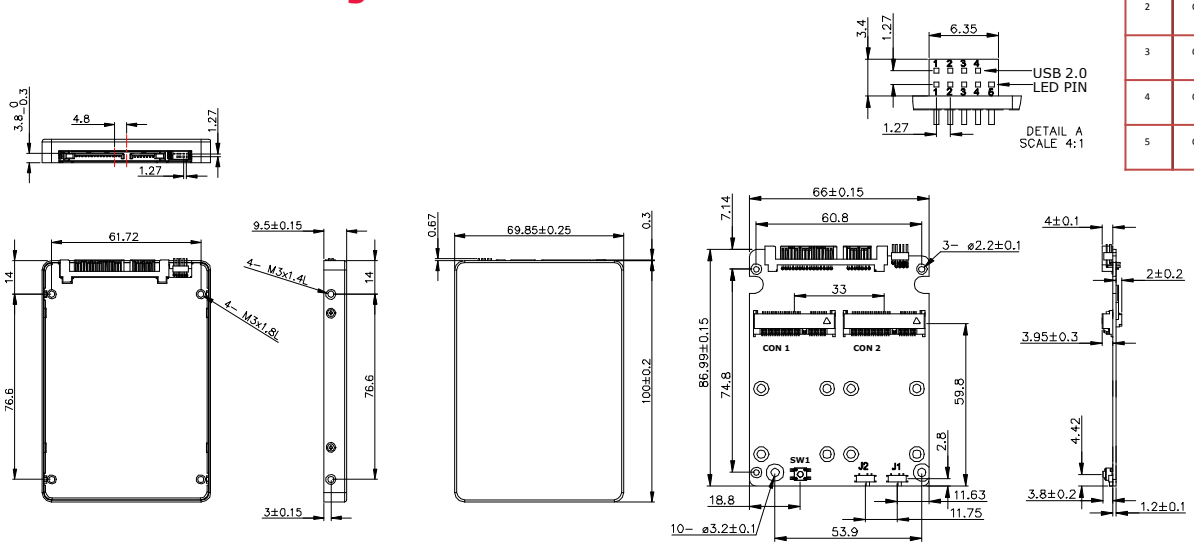


## Specifications

| | |
|---|---|
| Form-Factor | 2.5” SSD |
| Input I/F | SATA III, USB 2.0 |
| Output I/F | SATA III |
| Output Connector | mSATA x 2, Pin Header 9Pin x 1 |
| Max TDP | 2.45W (5V x 498mA) |
| Dimension (WxLxH) | 69.85 x 100 x 9.5mm, Weight: 80g |
| Temperature | Operation: STD: 0˚C ~ +70˚C<br>Storage: -55˚C ~ +95˚C |
| Environment | Vibration: 5G @7~2000Hz, Shock: 50G @ 0.5ms |
| Notes | 1. RAID Mode Setting:<br>[J1:J2]<br>RAID0: 2:2, RAID1: 1:2, PM: 1:1<br>2. Press tact switch SW1 for reset. |

**Headquarters (Taiwan)**
5F., No. 237, Sec. 1, Datong Rd., Xizhi Dist., New Taipei City 221, Taiwan
Tel: +886-2-77033000
Email: sales@innodisk.com

**Branch Offices:**
**USA**
usasales@innodisk.com
+1-510-770-9421
**Europe**
eusales@innodisk.com
+31-040-282-1818
**Japan**
jpsales@innodisk.com
+81-3-6661-9846
**China**
sales_cn@innodisk.com
+86-755-21673689

www.innodisk.com

© 2014 Innodisk Corporation. All right reserved. Specifications are subject to change without prior notice.

September 18, 2014

## Order information

**E2SS-32R1-C1**
2.5” to Dual SATA III RAID Module